CRTC INTERCONNECTION STEERING COMMITTEE (CISC)

REPORT to the CRTC

by the

Emergency Services Working Group (ESWG)

Consensus Report ESRE0062

ESTF059

In-Call Location Update (ICLU)

ICLU Trial Evaluation Report

November 27 2012

Version: 1.1

REVISION HISTORY

Version	Date	Summary of Changes
0.9.5	Nov. 6, 2012	DRAFT version submitted for ESWG Review and Comments
1.0	Nov. 16, 2012	Final version
1.1	Nov. 27, 2012	Final version for submission to CRTC

TABLE OF CONTENTS

EXECUTIVE SUMMARY **1**

1. BACKGROUND **2**

2. INTRODUCTION **3**

3. ICLU TRIAL DESIGN **5**

3.1 PURPOSE AND OBJECTIVES OF THE TRIAL 6
3.2 GENERIC TRIAL NETWORK SETUP 7
3.3 BASIC END-TO-END MESSAGE FLOW 7
3.4 LOCATION UPDATE INTERVALS (ICLU TIMER) 8
3.5 TRIAL STAGES 8
3.6 PARTICIPANTS 9

4. STAKEHOLDERS **10**

4.1 WIRELESS SERVICE PROVIDERS (WSPS) 10
4.1.1 Trial Assumptions, Requirements, Considerations and Prerequisites *10*
4.1.2 Trial Findings *10*
4.1.3 Service Implementation Requirements *11*
4.2 9-1-1 SERVICE PROVIDER (9-1-1SP) 11
4.2.1 Trial Assumptions, Requirements, Considerations and Prerequisites *11*
4.2.2 Trial Findings *12*
4.2.3 Service Implementation Requirements *13*
4.2.4 9-1-1SPs' Proposed Cost Recovery Mechanism *13*
4.3 PUBLIC SAFETY ANSWERING POINT (PSAP) 14
4.3.1 Trial Assumptions, Requirements, Considerations and Prerequisites *14*
4.3.2 Trial Findings *14*
4.3.3 Service Implementation Requirements *15*

5. RECOMMENDED IMPLEMENTATION TIMEFRAMES **16**

5.1 PSAP 9-1-1 IP NETWORK INTERFACE ENABLEMENT 17
5.2 PSAP TIME ESTIMATES 17

6. CONCLUSION **19**

7. RECOMMENDATIONS **20**

APPENDIX A TERMS & ACRONYMS **22**

APPENDIX B REFERENCE DOCUMENTS **24**

APPENDIX C TEST PLAN TEMPLATE **25**

APPENDIX D TIF59 WORKING GROUP NOTES

EXECUTIVE SUMMARY

On November 6, 2009 the Commission issued Telecom Decision CRTC 2009-697 – *CRTC Interconnection Steering Committee – Stage 2 features of wireless Phase II E9-1-1 service implementation*. In that Decision, the Commission indicated that the Emergency Services Working Group's (ESWG) recommendation that a PSAP-Initiated request method be developed and implemented by September 2012 as proposed in the ESRE0050 consensus Report.

The Task Identification Form (TIF) 59 – *Wireless Phase II E9-1-1 In-Call Location Update (ICLU)* created on December 4, 2008 following Telecom Regulatory Policy CRTC 2009-40 – *Implementation of wireless Phase II E9-1-1 service* reconvened to address the new mandate and specifically the planning and development of a technical trial.

This document is the Trial Evaluation Report from the CISC ESWG to the Canadian Radio-television and Telecommunications Commission ("CRTC" or "the Commission") in relation to the ICLU feature technical trial.

With the issuance of TD CRTC 2009-697, the TIF59 working group resumed its activities starting on February 24, 2010. Through various contributions and a series of conference calls that occurred between February 2010 and August 2012, the group solidified the technical and operational requirements and specifications to support the ICLU feature in preparing and conducting the trial.

Once the technical and operational specifications were agreed to, a detailed Test Plan was developed, highlighting what was required from the stakeholders involved to support the trial in their respective environment. The technical trial was conducted June 4-29, 2012 and involved the Prince-Edward-Island 9-1-1 PSAP, Bell Mobility, TELUS and Rogers (WSPs) and Bell Aliant with assistance from its partner company Bell Canada (9-1-1SP).

Based on the results collected from the trial, the ESWG developed conclusions and recommendations that are presented in this Report.

The ESWG recommends that the Commission approves this Report and the proposed timelines for a national deployment.

1. BACKGROUND

In early 2008, during the exploration phase for introducing the Wireless Phase II service in Canada, the Public Safety Answering Points (PSAP) requested the ability to perform manual, PSAP-initiated location updates. They advocated that this feature would be very helpful in situations where a single location fix would not be sufficient (e.g., caller is moving).

The October 31, 2008 ESWG report ESRE0046, "Technical and Operational Requirements of Wireless Phase II E9-1-1 Implementation" recommended, "*that the ESWG investigate the ability to provide mid-call location updates (Rebids)*[1] *for inclusion in a future deployment such as stage 2*." Telecom Regulatory Policy CRTC 2009-40, released on February 2, 2009, requested the CISC to file a report on its findings to the Commission by August 2, 2009.

In Telecom Regulatory Policy CRTC 2009-697 released on November 6, 2009, the Commission noted the ESWG's recommendation that a PSAP-Initiated request method be developed and implemented by September 2012 as proposed in the ESRE0050 consensus Report.

On May 6, 2010 the PSAP community submitted contribution ESCO0336 outlining PSAP requirements and capabilities related to In-Call Location Update (ICLU) functionality. In this contribution the PSAP community expressed the view that a technical trial should be conducted with a PSAP in the Maritimes as the IP network and XML-based Automatic Location Identification (ALI) protocol were already in use and provided the only available platform to determine the end to end impact of ICLU, in order to develop industry standards and best practices. They also confirmed that the most recent updated location should be provided on ICLU.

Contribution ESCO0375 submitted by Bell Canada, TELUS, SaskTel and Bell Aliant on February 11, 2011, provided additional details on how to implement the ICLU feature and that document provided a plan outline to conduct the trial. The objective was to establish an appropriate architecture in a timely fashion in order to comply with CRTC timelines while minimizing risks to the 9-1-1 network during development, deployment, testing and operation.

In August 2011, the TIF59 group resumed its trial preparedness activities. The technical trial was planned to take place in Prince-Edward-Island (PEI) in the 2nd quarter of 2012.

[1] Subsequent to the issuance of TRP CRTC 2009-40, the ESWG determined that the term "In-Call Location Update (ICLU)" was more appropriate. Consequently, the term ICLU is used in this document. Nevertheless, it is possible that other documents referenced herein use the term "Rebid".

2. INTRODUCTION

This document is the Trial Evaluation Report from the CISC ESWG to the CRTC in relation to the ICLU feature technical trial.

On November 6, 2009 the Commission issued Telecom Decision CRTC 2009-697 – *CRTC Interconnection Steering Committee – Stage 2 features of wireless Phase II E9-1-1 service implementation*. In that Decision, the Commission indicated that the Emergency Services Working Group (ESWG) recommendation that a PSAP-Initiated request method be developed and implemented by September 2012 as proposed in the ESRE0050 consensus Report. However, due to an extraordinary level of work at ESWG involving the same stakeholders' resources, the proposed timeline couldn't be met. An updated recommended timeline is provided in this Report.

The Task Identification Form (TIF) 59 – *Wireless Phase II E9-1-1 In-Call Location Update (ICLU)* created on December 4, 2008 following Telecom Regulatory Policy CRTC 2009-40 – *Implementation of wireless Phase II E9-1-1 service* reconvened to address the new mandate and specifically the planning and development of a technical trial. The TIF59 diary notes are provided in **Error! Reference source not found.**.

The TIF59 working group resumed its activities starting on February 24, 2010. Through various contributions and a series of conference calls that occurred between February 2010 and August 2012, the group solidified the technical and operational requirements and specifications to support the ICLU feature in preparation for the trial. For example, the group agreed with the following:

- That the ICLU feature could only be triggered on the data path to an ALI platform;
- That Internet Protocol (IP) communications between the Public Safety Answering Point (PSAP) and the Automatic Location Identification (ALI) platform were required;
- That a National Emergency Numbering Association (NENA) ALI Query Service (AQS) based ALI-to-PSAP protocol was appropriate; and
- That the existing Open Mobile Alliance (OMA) Mobile Location Protocol (MLP) implementation could be leveraged to support the ICLU feature between the ALI platform and the Wireless Services Providers' location platforms.

Once the technical and operational specifications were agreed to, a Test Plan was developed highlighting what was required from the stakeholders involved to support the trial in their respective environment. Then, a series of detailed test cases were developed.

In addition, the ESWG would like to point out that, due to specific trial environment technical characteristics and requirements, no secondary PSAP (downstream police, fire or ambulance dispatch agencies) were involved with any of the testing. Secondary PSAPs are expected to be the primary users of the ICLU feature. It is understood that, at a minimum and to finalize the proof-of-concept, a few additional tests may be required to confirm end to end feature compliance.

This Evaluation Report examines the ICLU trial, operational and technical requirements and specifications from the perspective of the stakeholders and key elements impacted as follows:

- The PSAPs
  - The Customer Premise Equipment
- The 9-1-1 Service Providers
  - The ALI platform
  - The ALI-to-PSAP communications protocol (NENA AQS)
  - The ALI-to PSAP IP data network
  - The ALI-to-WSP Wireless E9-1-1 Phase II communications protocol interface (OMA MLP)
- The Wireless Services Providers
  - The MPC/GMLC
  - The WSP-to-ALI Wireless E9-1-1 Phase II communications protocol interface (OMA MLP)

For each stakeholder, the following topics are examined:

- Trial assumptions, prerequisites, considerations and requirements;
- Trial findings;
- Service implementation requirements.

The technical trial was conducted June 4 to 29, 2012 and involved the PEI 9-1-1 PSAP, Bell Mobility, TELUS and Rogers (the WSPs) and Bell Aliant with assistance from its partner company Bell Canada (the 9-1-1SP).

3. ICLU TRIAL DESIGN

The ESCO375 contribution determined that the PSAP-initiated ICLU request should be performed over the data link to the ALI. This solution would leverage the existing ALI-to-MPC/GMLC (Mobile Positioning Centre/Gateway Mobile Location Centre) interface and the OMA-MLP thereby reducing complexity and costs.

It was also determined that a NENA AQS-based ALI-to-PSAP protocol would be appropriate, over a suitable network layer, to support PSAP-initiated ICLUs.

Bell Aliant, the 9-1-1SP serving the Maritimes, volunteered to participate in the technical trial for ICLU. Accordingly, Bell Aliant's ALI application needed to be modified. Modifications would include but would not be limited to the enablement of the "rebid" QueryType on the AQS protocol (ALI-to-PSAP) and the loc_type value "CURRENT" on OMA MLP (ALI-to-MPC/GMLC).

In May 2011, Bell Aliant published a special Terminal-to-Network Interface (TNI) document in the Maritimes in support of the technical trial. The modifications were introduced on the ALI production platform in October 2011.

The 9-1-1 administration office of Prince-Edward-Island expressed an interest and a desired to invest time and money to upgrade their Customer Premise Equipment (CPE) to enable an operator initiated In-Call Location Update (ICLU).

The Province requested their 9-1-1 software vendor to make changes to their software that would allow a 9-1-1 call taker to request an automatic ICLU while on an active call only.

The Wireless Service Providers (WSPs) TELUS, Bell Mobility and Rogers also expressed a desire to actively participate in the trial. This did not preclude any other regions or WSPs able to meet pre-requisite requirements and established timelines from initiating and participating in a trial of the ICLU feature.

The participating WSPs indicated that the required OMA MLP protocol update had already been implemented to support the ICLU feature; therefore they did not have to make changes to their networks. Testing was conducted based on agreed-to trial case scenarios. The trial included testing with Code Division Multiple Access (CDMA), High Speed Packet Access (HSPA) and Global System for Mobile (GSM) wireless technologies. The integrated Digital Enhanced Network (iDEN) technology was not tested as it was not available in PEI.

The trial plan assumed that all participating PSAPs were served by the same ALI platform. It was determined that a distinct test plan would be issued for any other 9-1-1 Service Provider area wishing to conduct a trial.

The ICLU feature is designed to solely provide an updated location during a live wireless 9-1-1 call. As such, it was recognized that the voice portion of the call was not impacted and remains as defined with Wireless E9-1-1 Phase II Stage 1. It was also recognized that the initial delivery of Wireless E9-1-1 Phase II Stage 1 (Wireless E9-1-1 Phase I and initial Wireless E9-1-1 Phase II locations) remains as is. Consequently, these are considered prerequisites and are not detailed as part of this Report.

Further, it is understood that the ICLU feature uses the same wireless location determination platforms and techniques implemented for Wireless E9-1-1 Phase II Stage 1 to determine an updated location. While end to end ICLU feature validation from a network perspective is warranted and required, the WSPs confirmed that there is no need to revisit each cell site/sector

to validate the feature functions, provided that it is successfully tested in at least one location per ILEC/ALI territory, or that per-site test calls involving the PSAPs are necessary.

3.1 Purpose and Objectives of the Trial

The TIF59 Group affirmed that the purpose and objectives of the ICLU trial in PEI would be designed to:

- Confirm the feature works as expected in the context it is intended for;
- Confirm the ICLU feature protocols as outlined in ESCO0375;
- Develop Industry standards and best practices;
- Confirm the 35-second ICLU Timer is adequate;
- Develop PSAP standard operating procedures; and
- Validate usefulness of the information provided.

The primary need for the ICLU feature as expressed by the PSAP community is to allow performing additional requests when the initial Phase II location response is not sufficient, as it would be the case when the caller is moving. However, the availability of the feature and its inherent capabilities enables the call taker to invoke ICLU for various reasons dependent on many factors/conditions associated with a particular emergency call. These are likely to be associated with one or more of the following events:

1. The PSAP call taker needs an updated location determination for the wireless caller's handset (e.g., caller may be moving);
2. The wireless caller's handset latitude and longitude location is unavailable at the time the Wireless E9-1-1 Phase II Stage 1 location is initially delivered to the PSAP;
3. To request a more accurate geolocation e.g., the radius of uncertainty is at the high end of the acceptable range;
4. The wireless caller is located inside a building and can move safely to another location.

While the primary goal of the ICLU feature is associated with item 1 above, the technical trial was designed to incorporate tests and findings from the other "collateral" benefits listed.

3.2 Generic Trial Network Setup

The following diagram depicts the generic network setup to support the technical ICLU trial.

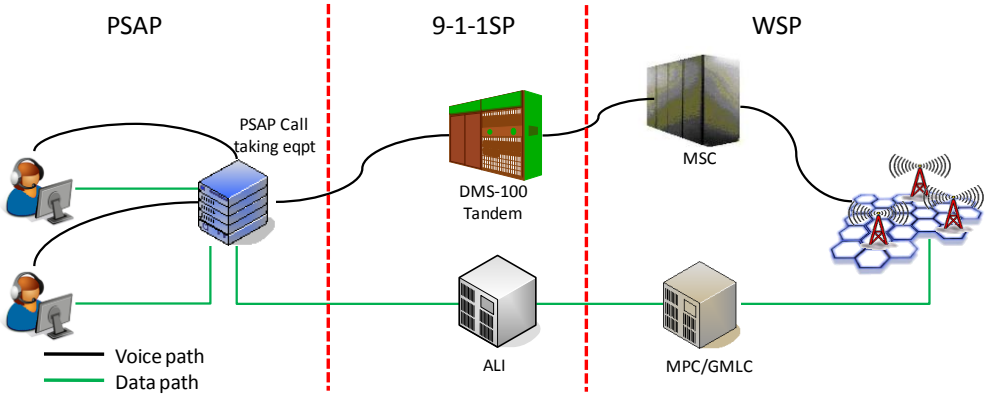

For ICLU, only the data path is being utilized.

3.3 Basic End-to-End Message Flow

The ICLU feature is designed to be manually invoked from a PSAP call taking position during a live wireless emergency call where initial Wireless E9-1-1 Phase II information has been received. The following diagram depicts the components involved and the basic message flow for an end-to-end ICLU providing a valid geolocation.

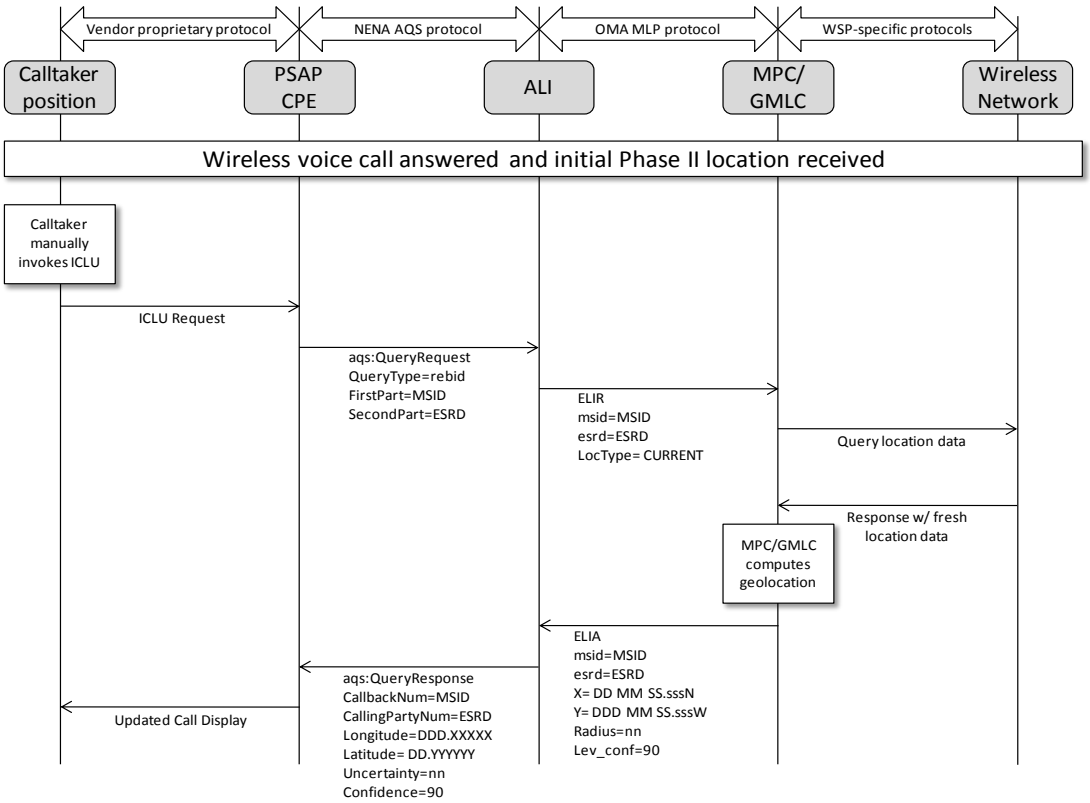

3.4 Location Update Intervals (ICLU Timer)

The PSAPs had expressed a view that they should have the ability to query the WSPs as and when required. The WSPs conducted internal reviews of systems and it was initially determined that ICLU requests intervals could only be set at a minimum of 60 seconds, independent of when the response is received at the PSAP (see ESCO0338). This minimum interval was deemed required by the WSPs as a safeguard to protect their location infrastructures. Contribution ESCO0375 recommended that this safeguard be implemented as a timer (the ICLU Timer) instantiated at the PSAP CPE.

The PSAPs indicated that a 60-second interval was too long as most 9-1-1 calls are processed well within 60 seconds. After further discussions and testing by the WSPs, the 60-second interval based on the request was replaced by a 35-second interval based on the response.

Accordingly, it was determined that the PSAP-initiated ICLU feature would be enabled based on the following parameters:

- The anchor point to start the clock on the ICLU timer would be at receipt of any Phase II location information on the PSAP CPE.
- From that anchor point, an ICLU can be initiated by the call taker 35 seconds following receipt of the initial and any subsequent Phase II location information at the CPE.

The following diagram depicts an example implementation of the ICLU Timer:

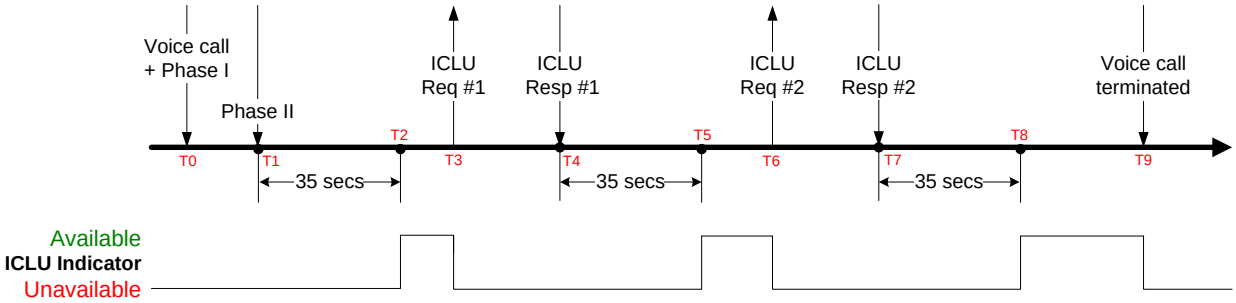

3.5 Trial Stages

The ICLU trial was developed in stages as follows:

- <u>ALI-to-PSAP Protocol definition</u>

  In May 2011, Bell Aliant published a special version of its TNI document in the Maritimes that included the technical details to support the ICLU trial as defined in ESCO0375. This document was to be used by the PSAPs and their vendors to comply with the protocol definition for ICLU.

- <u>Development of feature on the ALI side</u>

  Bell Aliant's ALI application was modified to enable the "rebid" QueryType on the AQS protocol (ALI-to-PSAP) and the loc_type value "CURRENT" on OMA MLP (ALI-to-MPC/GMLC), among other things. These modifications were introduced on the production platform in October 2011.

- Identifying the participating PSAP

  PEI has one 9-1-1 PSAP and that site was determined to be the test site for the ICLU trial

- Development of the ICLU feature on PSAP equipment

  PEI provided their vendor with the specifications required to develop the feature that would enable PSAP-initiated ICLU at 35-second intervals.

- Testing of PSAP readiness with SP to validate feature functionality

  The Province of PEI, requested support from the WSPs to conduct some in house testing that would allow the software vendor to validate the new feature added for conducting a manual ICLU.

- Establishing Test Case Scenarios and Developing Test Plan

  The TIF59 group together worked on developing the desired test case scenarios that would inform the PSAP, WSP and 9-1-1SP on benefits and merits of the ICLU feature.

- Initiating Trial and Reporting Findings

  In June 2012, the three WSPs, TELUS, Rogers and Bell Mobility with the 9-1-1SP, Bell Aliant and the PEI PSAP proceeded with testing the feature with all test case scenarios as described in Appendix C.

3.6 Participants

The trial participants included: Bell Mobility, Rogers, TELUS, Bell Aliant and the PEI PSAP. The trial was a technical and operational trial and did not involve end users.

4. STAKEHOLDERS

Through the TIF59 activities, the stakeholders have been identified to be the WSPs, 9-1-1SPs and PSAPs. This section provides insights and information from each stakeholder's perspective who participated in developing, implementing and deploying the ICLU feature for the trial.

4.1 Wireless Service Providers (WSPs)

Bell Mobility, Rogers and TELUS actively participated in the ICLU trial over a 3-week period in June 2012.

4.1.1 TRIAL ASSUMPTIONS, REQUIREMENTS, CONSIDERATIONS AND PREREQUISITES

Originally, a comprehensive test plan was developed between the three wireless providers that addressed both live and lab test scenarios. It was later determined that only live test calls would be performed due to the difficulty involved in arranging lab testing. These 'live' tests were conducted with the PEI PSAP and covered approximately 30 test call scenarios (Appendix C). All of these test calls were placed by the WSP's tester to the PSAP's dedicated test call taker. The following criteria were developed in preparation for the trial:

- Test cases shall be performed in a 'live' 9-1-1 environment to confirm operational authenticity.
- Calls shall be placed only within the PEI PSAP's serving area (one test scenario will include the WSP tester transitioning between the PEI PSAP and the New Brunswick PSAP serving areas).
- WSP test technician shall place 9-1-1 calls while in stationary, walking, running and driving modes.
- Tests shall be conducted in both outdoor and indoor environments.
- Tests shall be conducted in rural and urban settings throughout PEI.
- All wireless network technologies used by the trial WSPs in the PSAP coverage area should be tested (HSPA, CDMA and GSM).
- WSPs must support both OMA MLP 'loc type' values of "INITIAL" and "CURRENT" on ALI requests.
- Call specific test result details (including accuracy measurements) shall be recorded and shared only between the PSAP and the respective WSPs.

The WSPs may have to upgrade their MLP interface to support ICLU signalling and ensure that the most recent updated location will be provided in ICLU responses. Bell Mobility, Rogers and TELUS subsequently confirmed that their wireless location platforms were already ICLU compliant and did not need to be upgraded for the trial.

4.1.2 TRIAL FINDINGS

TELUS, Bell Mobility and Rogers conducted conclusive detailed and comprehensive test cases during the trial. CDMA and HSPA technologies were tested by TELUS and Bell Mobility while Rogers tested GSM and HSPA technologies.

All the performed test cases passed and it was thereby confirmed the PSAP can successfully initiate an ICLU request for an active wireless call after the initial Phase II has been delivered and another 35 seconds has elapsed. The ICLU responses to these requests provided the PSAP with updated Phase II location information.

Participating WSPs confirmed that the MLP protocol parameters as prescribed in ESCO0375 were satisfactory in appropriately supporting the ICLU feature on their network and that the most recent updated location was indeed provided. It was also confirmed that the automated 35-second ICLU Timer implemented at the PSAP CPE in the context of the trial was an appropriate and effective safeguard for WSP's location infrastructures. Tests were successfully conducted simulating the following circumstances:

- Fast and slow motion situations (walking, running, slow and fast driving);
- Stationary modes;
- Indoor and outdoor environments; and
- Transitioning between outdoor to indoor and indoor to outdoor.

Additional testing confirmed location updates were also provided for unknown CBN call types that still provided a valid ESRD number, but could not be provided for other unknown CBN call types (reference ESRE0052). Note that no cell site/sector modification was required before or during testing.

4.1.3 Service Implementation Requirements

All WSPs will be required to ensure network and protocol compliance for the new ICLU feature. In particular, WSPs will need to support both the "INITIAL" and "CURRENT" OMA MLP loc_type values on ALI requests and also provide the most recent updated location in the ICLU responses. WSPs not involved in this trial will be expected at a minimum to conduct preproduction test cases #001, #005, #006 and #024, as outlined in Appendix C. The remaining test cases would be optional. Also, trial criteria outlined in section 4.1.1 would be expected prior to service implementations. Note that all wireless service technologies should be tested in a given ALI territory.

4.2 9-1-1 Service Provider (9-1-1SP)

Bell Aliant is the incumbent 9-1-1SP in the Maritimes and actively participated in the trial preparation activities, supported by its partner company, Bell Canada. As stated elsewhere in this Report, Bell Aliant has already deployed an IP network infrastructure to Nova-Scotia and Prince-Edward-Island PSAPs, along with an XML-based communications protocol for ALI delivery. This situation made this region a candidate of choice to support the technical trial.

4.2.1 Trial Assumptions, Requirements, Considerations and Prerequisites

In ESCO0375, the 9-1-1SPs (Bell Canada, Bell Aliant, TELUS and SaskTel) defined a number of key prerequisites and proposed a series of protocol parameters and other key elements in order for ICLU to work in the context of the Canadian E9-1-1 architecture. The contribution became the foundation for the development of the technical infrastructure to conduct the ICLU trial. Among other things, the contribution defined that:

- ICLU should be invoked only over a suitable data network through the ALI system;
- The ICLU Timer and associated indicator be instantiated at the PSAP CPE;

- The NENA AQS protocol (or a variation of) for ALI delivery was appropriate;
- The OMA MLP v3.2 Emergency Location Immediate Service (ELIS) be leveraged to support ICLU communications between the ALI and the MPC/GMLC;

Further, the contribution identified five (5) conditions to be met in order to design and conduct a successful trial:

1. The method by which an ICLU request is conveyed from the ALI to the MPC/GMLC be specified and agreed to by Industry;
2. The parameters and associated values of the OMA MLP v3.2 Emergency Location Immediate Service (ELIS) be specified and agreed to by the Industry (e.g., loc_type "type= CURRENT");
3. A draft ALI-to-PSAP interface protocol be specified for support of the ICLU feature by the serving 9-1-1SP;
4. PSAP CPE vendors confirm their commitment to comply with the trial version of the ALI-to-PSAP interface protocol; and
5. Sufficient time is allotted for the development and implementation cycles of the necessary software and hardware at the WSP, ALI and PSAP CPE to support the trial.

The TIF59 group came to consensus in adopting resolutions to satisfy all of the conditions above which allowed Bell Aliant to proceed with the necessary work to enable the ICLU feature on its network in preparation for the technical trial.

The only deviance from ESCO0375 is related to the ICLU Timer. As discussed earlier in this Report, the initial proposal based on the WSPs' comments (60-second interval based on the request) was replaced by a 35-second interval based on the response. However, since this timer was intended for implementation at the PSAP CPE, this change did not impact the design and engineering of the ALI platform.

In preparation for the trial, it was highlighted that it was advisable that the network be upgraded starting at the receiving end (the WSP) towards the originating end (the PSAP) to avoid the risk of stranded ICLU requests. All components must be upgraded in order to perform a successful end-to-end ICLU request/response cycle.

In May 2011 Bell Canada, on behalf of Bell Aliant, published a special version of its TNI specifications to support the trial on its current ALI platform. Bell Canada notes that while suitable for a technical trial to perform a proof of concept, its current ALI platform cannot support a full deployment of this IP technology on a large-scale basis. The document was therefore distributed as a "need-to-know" basis to the participating parties, namely Bell Aliant, PEI and its vendor.

In October 2011, the production ALI platform was upgraded and was deemed ready to support the trial.

In December 2011, Bell Canada, Bell Mobility and Bell Aliant performed a number of qualification test calls to confirm the proper behaviour of the various Network elements involved to ensure trial readiness. Those tests were performed using a PSAP simulator tool, not a real PSAP.

4.2.2 TRIAL FINDINGS

The 9-1-1SP's primary involvement in ICLU is through the ALI service and data communications with the PSAPs and WSPs. As noted above, the ALI platform was modified to support the

technical trial, according to the protocols and parameters defined in ESCO0375. During the course of the tests that were conducted, no issue was found with the behaviour of the ALI, both from the PSAP and the WSP side. The ALI was able 100% of the time to process ICLU requests coming from the PSAP, interwork them with the designated MPCs/GMLCs over OMA MLP, receive and process the responses received from the MPCs/GMLCs and interwork those responses to the requesting PSAP, all of which within the set timer values. It is therefore concluded that the protocols and parameters defined in ESCO0375 are appropriate for supporting ICLU on the ALI platform.

There was also no issue raised from an IP network perspective and the existing connections to the PSAP and the WSPs were adequate to support the limited load produced by the trial. It should be noted however that load testing was out of scope for this trial.

4.2.3 SERVICE IMPLEMENTATION REQUIREMENTS

In order to implement the ICLU feature across the country, the 9-1-1SPs should:

- Design, engineer and deploy a native IP data communications network for primary and secondary PSAPs to support standard ALI delivery and ICLU;
- Implement an ALI platform that can support a large-scale deployment of the ICLU features, protocols and interfaces within the 9-1-1SP's serving area;
- Implement modifications to the OMA MLP interface to support loc_type "type=CURRENT" for ICLU requests;
- Publish a TNI specifications document that incorporates the trial findings and recommendations as appropriate;
- Deploy a NENA AQS-based communications protocol as the ALI-to-PSAP protocol for ALI delivery;
- At the introduction of the feature in its serving territory, perform necessary tests to ensure that ICLU works for secondary PSAPs and call-transfer scenarios;
- Update the WSP Interconnection document as appropriate; and
- Ensure ICLU parameters are tested on top of regular Wireless E9-1-1 Phase II when new WSPs are interconnected.

MTS is in a unique position among Canadian 9-1-1SPs in that its existing 9-1-1 platform already provides for much, though not all the functional requirements as specified above for PSAP-initiated ICLU functionality. For example, it does not require direct data connectivity between the PSAP and the ALI nor the NENA AQS-based ALI-to-PSAP protocol. Nevertheless, certain modifications to its 9-1-1 platform will be required, necessitating the involvement of its 9-1-1 switch platform vendor, which is already underway.[2]

4.2.4 9-1-1SPS' PROPOSED COST RECOVERY MECHANISM

The 9-1-1SPs propose that the method of cost recovery of their Wireless E9-1-1 Phase II Stage 2 costs and charges be a tariff that would be structured in the same way as Wireless E9-1-1 Phase I and Wireless E9-1-1 Phase II Stage 1. Essentially, this would mean a distinct surcharge that would be applied to all WSPs per wireless subscriber per month.

[2] Please refer to MTS contribution ESCO0422 for further details.

This method leverages the existing billing model used by all ILECs to charge all WSPs for existing wireless E9-1-1 services. Wireless subscriber counts that are currently provided to ILECs for Wireless E9-1-1 billing would be applied to the new tariff rate for Wireless E9-1-1 Phase II Stage 2. Further, this method is deemed less costly and less effort would be required to implement (by ILECs and WSPs). Also, it ensures fair and consistent billing treatment across all wireless E9-1-1 services.

Due to the multi-year deployment required for Wireless E9-1-1 Phase II Stage 2 ICLU, 9-1-1SPs may be required to re-file the cost study in order to include and adjust all costs that are causal to demand and service. 9-1-1SPs will file for interim approval prior to service launch in accordance with CRTC guidelines and decisions and may re-file once deployment has been completed.

4.3 Public Safety Answering Point (PSAP)

The PEI 9-1-1 Administration Office funded an upgrade to the 9-1-1 CPE and volunteered to conduct the ICLU proof of concept testing at their PSAP.

The PSAP accommodated testing by the three participating WSPs over the span of a three-week period.

4.3.1 Trial Assumptions, Requirements, Considerations and Prerequisites

As previously mentioned, the PEI Primary PSAP met the necessary conditions defined in contribution ESCO0375 to support the ICLU trial. In fact, it uses an IP network to communicate directly with the ALI platform and has implemented a variation of the NENA AQS protocol for ALI delivery. The IP network links were assessed by Bell Aliant and deemed appropriate to support the trial.

PEI uses a sophisticated, software-based call taking CPE. It was determined at the onset that the CPE software would need to be upgraded to support the ICLU feature. PEI thus engaged its CPE vendor which assessed the required changes by reviewing contribution ESCO0375 and Bell Aliant's special TNI document. More specifically, the CPE software was modified to implement the ICLU Timer, a new "Rebid" button to the call taker's user interface, the logics to receive, send process and log ICLU requests and responses, along with the ability for the call taker to override or not the last received Phase II data.

The CPE software was first implemented and tested in a captive environment. Once proven there, the upgrade was applied to the PSAP live environment.

Draft SOPs were created and initial training provided to call takers involved in the trial.

4.3.2 Trial Findings

With the help of Bell Aliant, the PEI Primary PSAP conducted pre-trial test calls from local cell sites to ensure the ICLU feature was functioning as required. This test was valuable in that it identified to the CPE vendor some required programming changes to the CPE user interface design, to ensure expected feature functionality were in place prior to the start of the trial.

The trial resulted in all three WSPs being able to provide ICLU responses to the test cases as outlined in the test plan. The actual process of the ICLU response was successful from a PSAP perspective. The success was determined by any response from the WSP, whether it be an error or an ICLU.

The CPE software implementation worked as expected during the trial. On an active wireless 9-1-1 call, the "Rebid" button remained greyed-out at call-answer time and when the initial Phase

II information was received, as well as 35 seconds thereafter. Once the ICLU Timer has elapsed the button was activated, allowing the call taker to click to launch an ICLU request. Once clicked, it then returned to the inactivated state for another 35 seconds. The call taker had the ability to preview the new Phase II data in a specific area of the screen and decide whether or not to override the current information. If overridden, the new Phase II location was positioned on the map.

The updated Phase II information generally proved to be useful. Nevertheless, some scenarios generated updated Phase II results that were not as useful. Those results were however expected given the scenarios. For example, when the user moved from outdoor to indoor thus loosing GPS line-of-sight, the updated Phase II location was less useful and generally discarded.

The setup in PEI did not allow the secondary PSAPs to participate in the trial because they are not directly connected to the ALI, therefore did not meet one of the conditions required to initiate an ICLU request. Nevertheless, it is recognized that all agencies would benefit from having access to the feature based on the nature of their duties.

Once the trial was completed, the PEI 9-1-1 PSAP elected to deploy the ICLU feature to all call taker positions and make the feature fully operational in its live environment.

4.3.3 SERVICE IMPLEMENTATION REQUIREMENTS

The following requirements/recommendations are provided in order to enable the ICLU feature at any Primary and Secondary PSAP to maximize call taker and user experiences:

- Must have direct IP links to production ALIs;
- Must implement and use a NENA AQS-based Terminal-to-Network Interface protocol for ALI delivery;
- The PSAP environment software must be upgraded to support the manual ICLU feature as per available technical specifications;
- The PSAP should test the ICLU feature functionality to validate system enhancements prior to go live;
- The PSAP should have the feature built so a call taker is only able to send an ICLU request during an active wireless call at its workstation;
- The PSAP should have the feature built to include an automatic timer at the CPE which will not allow the call taker to launch an ICLU request before the 35-second ICLU Timer has elapsed (for example, the “Rebid” button is greyed-out);
- There must only be one ICLU request active at any given time for any given CBN within the local CPE environment;
- The PSAP should have the feature built to allow the call taker to review the latest ICLU data and decide whether the new result should override the previous one;
- The PSAP should log all received ICLU data in the Record Management System (RMS) if available, irrespective of whether the data was accepted or not by the call taker;
- The PSAP should create/update SOPs in support of the new feature;
- The PSAP should provide training to all staff on the proper use of the new feature; and
- The PSAP should deploy the new feature to all workstations and conduct tests to ensure the feature is fully functional.

5. RECOMMENDED IMPLEMENTATION TIMEFRAMES

The following table summarizes new requirements per stakeholders to enable the Wireless E9-1-1 Phase II Stage 2 ICLU feature. Estimates of required minimum timeframes are also listed.

Stakeholder	New requirements	Estimated timeframe to implement new requirements subsequent to Commission Decision
WSPs and Resellers	Upgrade each Wireless technology's location platform (e.g., CDMA, HSPA, iDEN, GSM, etc.) to support and process ICLU requests and responses	2 to 6 months
9-1-1SPs[3]	• Implement NENA AQS-based and OMA MLP protocol changes on a suitable ALI platform • Implement and deploy a PSAP 9-1-1 IP network to each PSAP with direct connectivity to the ALI • Update and publish the necessary Network Interface documents according to Industry notification guidelines	2 to 6 months 9 to 29 months (refer to section 5.1) 4 to 8 months
PSAPs	PSAPs' overall timeframe hinges on the assessment, engineering, deployment of the following activities as deemed appropriate by each individual PSAP: • Upgrade CAD/call taking equipment and/or function to enable the ICLU functionality and any other feature/service as deemed appropriate • Enable IP Communications/Network • Security • Internal LAN/network • Workstation integration • CAD integration • Design, develop and implement training programs and Standard Operating Procedures (SOPs)	TBD (refer to section 5.2)

[3] MTS indicated that they will need 9-12 months to implement the applicable requirements on their 9-1-1 platform to meet the standard implementation of the ICLU features as per the recommendations of this report.

5.1 PSAP 9-1-1 IP Network Interface Enablement

The IP enablement of the PSAP 9-1-1 Network Interface is a critical prerequisite for the implementation of the Wireless E9-1-1 Phase II Stage 2 ICLU feature and other services (e.g., the SMS T9-1-1 service; see ESRE0061), and will be introduced by 9-1-1SPs working in conjunction with primary and secondary PSAPs with direct connections to the ALI. The timeline for implementation is dependent on two main factors:

1. 9-1-1SP's network modernization plan to implement IP links to PSAPs to replace existing de-standardized network data links being no longer supported; and
2. A request by individual PSAP to its 9-1-1SP to implement the capabilities.

The minimum to maximum 9-29 months timeframe shown in this Report represents the time it would take to implement this new network from the first PSAP to the last PSAP across the country. As a result, the time within which a particular PSAP will implement is dependent upon when the ICLU feature is available on the 9-1-1 network and when the PSAP makes its request to its 9-1-1SP. Another factor to consider is that some 9-1-1SPs have a much larger number of PSAPs in their serving territory than others thus requiring a longer timeframe to complete.

The ESWG considers that, in order for the new PSAP 9-1-1 IP Network to be implemented in the shortest timeframe, the PSAP shall make a request to its 9-1-1SP as soon as it is possible in order to kick start the implementation process. The ESWG notes that the implementation of the Wireless E9-1-1 Phase II Stage 2 ICLU feature is dependent on other infrastructure changes however it understands that some activities can be performed concurrently.

As a result of the above, after the Commission's express approval of this Report, it is expected that all primary and secondary PSAPs with direct connectivity to an ALI will provide to the ESWG either directly or through the 9-1-1SPs their expected PSAP 9-1-1 IP Network implementation timeframes for inclusion in a detailed rollout schedule. The ESWG will develop the rollout schedule in two main streams; 1) rollout of primary PSAPs to be reported directly to ESWG, 2) rollout of secondary PSAPs to be reported directly or indirectly to ESWG.

Both the Wireless E9-1-1Phase II Stage 2 ICLU feature and new services like SMS T9-1-1 can be made available to a PSAP once the prerequisite PSAP 9-1-1 IP Network implementation has been completed for that PSAP, and the corresponding PSAP CPE upgrade has been completed. This is expected to impact the overall national deployment of the feature.

5.2 PSAP Time Estimates

Concurrent with the implementation of Wireless E9-1-1 Phase II Stage 2 features, PSAPs must seriously consider other major projects and initiatives that will impact their critical systems and operations. For instance, regional and/or national initiatives, like the introduction of IP communications at the PSAP for ALI delivery, a prerequisite for ICLU, and the introduction of the SMS T9-1-1 service (see ESRE0061), may force additional development requirements on their call taking/CAD equipment, internal LAN/network, security and on their funding requirements, Standard Operating Procedures, processes and training.

These important projects are scheduled to be completed within the next couple of years. They are important undertakings that may create technical, administrative and operational dependencies with the introduction of ICLU at the PSAPs. Moreover, ICLU feature deployment may need to be coordinated within municipal/provincial 9-1-1 systems to provide ICLU capabilities to primary and secondary PSAPs.

Additional validations may be required before being authorized to integrate any automated functions into the complex, secured and restricted emergency call management environment. As such, it is strongly recommended that a thorough and careful planning and coordination of all activities required in introducing multiple projects and/or initiatives within the PSAP must be considered and undertaken by each PSAP. Moreover, other local projects and initiatives like voice switch upgrades, PSAP consolidations, call routing and network changes, etc. must also be taken into considerations. Therefore, it is expected that each PSAP will have a different timeline for the introduction of the Wireless E9-1-1 Phase II Stage 2 ICLU feature.

6. CONCLUSION

The ESWG concludes that the ICLU trial was a success and that the feature would improve the E9-1-1 service provided to wireless users based on the following trial findings:

- All the performed test cases passed and it was thereby confirmed that the 9-1-1 wireless network, E9-1-1 infrastructure and the PSAP could successfully initiate and process an ICLU request/response cycle for an active wireless call after the initial Phase II had been delivered, and 35 seconds had elapsed.
- It was further confirmed that the ICLU responses to these requests provided Phase II location information as it was designed.
- The ICLU feature performed as expected in the context it was intended for and generally proved to be useful to the call takers.
- The ICLU feature provides an additional tool to call takers in processing emergency calls which significantly reduces call processing time compared to contacting the WSP's 24/7 contact centre.
- The E9-1-1 infrastructure, and network components, protocols and interfaces can support the ICLU feature as per the technical specifications.
- The timing parameters implemented with Wireless E9-1-1 Phase II Stage 1 were reused in the trial and proved effective in the context of the ICLU feature.

The ESWG recognizes that there is no guarantee that the updated Wireless E9-1-1 Phase II response will be more useful to the call taker than the previous one, noting however that trial results indicated they generally were.

The ability for the call taker to initiate an ICLU request at call time has proven to be a tangible improvement over the current method to contact the WSP 24/7 contact centre.

The ESWG notes that the WSP 24/7 contact centres should remain in place to handle requests from the PSAPs.

Cognisant of the fact that ICLU was an important feature requested by PSAPs at the onset of discussions relative to rolling out Wireless E9-1-1 Phase II service in Canada, and based on the results of the this trial, the ESWG concludes that the ICLU feature should be enabled for all primary and secondary PSAPs with direct data connectivity to an ALI platform.

In order to avoid potential stranded ICLU requests, the ESWG is of the opinion that the WSPs' infrastructures should be upgraded first, or in concurrence with the 9-1-1SPs' ALI platforms, prior to enabling the first PSAP. This would facilitate the rollout and would allow call takers to invoke the feature on any wireless calls being processed within any given PSAP serving area, and to expect a response, irrespective of the WSP.

Because the ICLU feature enablement is network-wide for WSPs and 9-1-1SPs, functional and compliancy testing needs only to be performed once per WSP and 9-1-1SP with one PSAP. PSAPs may need to perform additional testing with any WSPs present in their jurisdictions, and such testing would require coordination and agreement between WSPs and PSAPs.

7. RECOMMENDATIONS

The ESWG requests that the CRTC approve the following recommendations of this Consensus Report:

1. As recommended in ESRE0050 and approved by the Commission in TD CRTC 2009-697, the ESWG recommends that the ICLU feature be made available by WSPs and 9-1-1SPs to all primary and secondary PSAPs in Canada with direct data connectivity to a 9-1-1SP ALI platform, according to the timeline estimates proposed in this Report.
2. The ESWG shall finalize the Wireless E9-1-1 Phase II Stage 2 ICLU Technical Specifications within three months from the Decision to ensure a uniform deployment for PSAPs, WSPs and 9-1-1SPs.
3. The ESWG shall develop a detailed PSAP rollout schedule built on the time estimates provided in this Report and that the rollout plan includes coordination between all stakeholders.
4. The ESWG shall develop the rollout schedule in two main streams; 1) rollout of primary PSAPs to be reported directly to ESWG, 2) rollout of secondary PSAPs to be reported directly or indirectly to ESWG.
5. Given that ICLU needs to work over native IP communications links, the ESWG recommends that ICLU be made available to the PSAPs at the same time they migrate to the PSAP 9-1-1 IP network and implement the NENA AQS-based protocol for ALI delivery.
6. Additionally, given that an IP network is the foundation for many other initiatives to evolve the 9-1-1 service in Canada, the ESWG recommends that the CRTC give the highest priority in reviewing this Report and render its Decision in the shortest possible timeframe.
7. The ESWG recommends that Wireless E9-1-1 Phase II Stage 2 becomes mandatory for all WSPs and Resellers, existing or new, which provide wireless voice service in any part of Canada where E9-1-1 is available.
8. The ESWG recommends that WSPs maintain 24/7 contact centres to handle PSAP requests for additional information.
9. The interconnection infrastructure implemented with the introduction of Wireless E9-1-1 Phase II Stage 1 shall be leveraged i.e., no new interconnection is required for already interconnected WSPs.
10. The OMA MLP v3.2 protocol implemented with the introduction of the Wireless E9-1-1 Phase II Stage 1 service shall be leveraged to support the ICLU feature, at and between the Wireless Location Platforms and all ALI platforms. Implementations shall be upgraded to support the loc_type “type= CURRENT” in the ELIR message in addition to loc_type “type= INITIAL”. Based on this Report’s findings, other existing parameters shall remain as implemented with Wireless E9-1-1 Phase II Stage 1.
11. 9-1-1SPs should implement a NENA AQS-based ALI-to-PSAP protocol to support the ICLU feature and enable the “Rebid” query type.
12. The NENA AQS-based ALI-to-PSAP protocol shall be supported over a suitable PSAP 9-1-1 IP network for ALI delivery service.

13. A well-formed ICLU request emanating from the PSAP CPE shall contain both the CBN and ESRD 10-digit strings.
14. The ICLU feature shall be supported only during an active wireless call.
15. The ICLU response shall be provided to the call taker that has made the ICLU request.
16. There shall be only one ICLU request active at any given time for any given CBN within one PSAP CPE environment.
17. PSAPs should implement the ICLU Timer (35-second intervals from the last received Phase II response) at the CPE.
18. Upon Commission approval of this Report, Industry stakeholders shall take the following actions to deploy the Wireless E9-1-1 Phase II Stage 2 ICLU feature:
    a. WSPs shall upgrade each of their wireless technology's location platform (e.g., CDMA, HSPA, iDEN, GSM, etc.) to support and process Wireless E9-1-1 Phase II Stage 2 ICLU requests and responses in addition to Wireless E9-1-1 Phase II Stage 1 initial requests and responses.
    b. 9-1-1SPs shall enable the ICLU feature network-wide on upgraded ALI platforms. This will ensure that the 9-1-1SP is ready to process PSAP requests to enable the feature at the PSAP CPE.
    c. 9-1-1SPs shall publish revised Network Interface documents, amended as appropriate to incorporate the necessary details in support of the ICLU feature, according to Industry notification guidelines.
    d. Each stakeholder must develop the processes and tools to operate and manage the Wireless E9-1-1 Phase II Stage 2 ICLU feature and integrate these in their standard operating procedures. Training for management, technical and clerical personnel is also required.
    e. PSAPs to implement the required technical changes as prescribed by the 9-1-1SP's Terminal-to-Network Interface (TNI) specifications document for ALI delivery and ICLU support.
    f. PSAPs shall proceed with the integration of external and secure IP networking capabilities in conjunction with other major projects and initiatives.
    g. Stakeholders shall conduct outstanding ICLU technical feature and functionality validation, and end-to-end testing as appropriate.
    h. Other activities as determined by the ESWG or the Commission.

APPENDIX A TERMS & ACRONYMS

9-1-1SP	9-1-1 Services Provider
ALI	Automatic Location Identification
AQS	ALI Query Service
CAD	Computer-Aided Dispatch
CBN	Call Back Number
CDMA	Code Division Multiple Access
CISC	CRTC Interconnection Steering Committee
CPE	Customer Premise Equipment
CRTC	Canadian Radio-television and Telecommunications Commission
ELIR	Emergency Location Immediate Request
ELIS	Emergency Location Immediate Service
ESCO	Emergency Service Central Office code
ESRD	Emergency Service Routing Digit
ESWG	Emergency Services Working Group
GMLC	Gateway Mobile Location Centre
GPS	Global Positioning System
GSM	Global System for Mobile
HSPA	High Speed Packet Access
ICLU	In-Call Location Update
iDEN	integrated Digital Enhanced Network
IP	Internet Protocol
ITS	Integrated Telephone System
LAN	Local Area Network
MLP	Mobile Location Protocol
MPC	Mobile Positioning Centre
MSID	Mobile Station Identifier
NENA	National emergency Number Association
NPA	Numbering Plan Area
OMA	Open Mobile Alliance
PEI	Prince-Edward-Island
PSAP	Public Safety Answering Point
RMS	Record Management System

SIM	Subscriber Identity Module
SMS	Short Message Service
SOP	Standard Operating Procedure
T9-1-1	Text to 9-1-1
TIF	Task Identification Form
TNI	Terminal-to-Network Interface
WSP	Wireless Service Provider
XML	eXtensible Markup Language

APPENDIX B REFERENCE DOCUMENTS

- **Telecom Decision CRTC 2003-53**: *Conditions of service for wireless competitive local exchange carriers and for emergency services offered by wireless service providers*, issued 12 August 2003, as amended by **Telecom Decision CRTC 2003-53-1**, 25 September 2003

- **ESWG Consensus Report ESRE0046** (i.e., TIF 54, 55, 56): Technical and Operational Requirements of Wireless Phase II E9-1-1 Implementation, dated 31 October 2008 (filed 31 October 2008)
- **Telecom Regulatory Policy CRTC 2009-40,** Implementation of wireless Phase II E9-1-1 service, issued 2 February 2009

- **ESWG Consensus Report ESRE0047** (i.e., TIF 57): Wireless E9-1-1 Phase 2 Stage 1Technical Specification Recommendation Version 1.4, dated 8 May 2009 (filed 8 May 2009)
- **ESWG Consensus Report ESRE0048a** (i.e., TIF 57, 58, 59): Rollout Schedule for Wireless Phase II Stage 1 E9-1-1 Implementation, dated 1 May 2009 (filed 8 May 2009)
- **Telecom Decision CRTC 2009-328:** CISC - Wireless Phase II E9-1-1 service consensus reports, issued 4 June 2009

- **ESWG Consensus Report ESRE0049** (i.e., TIF 57, 58, 59): Wireless E9-1-1 Phase II Stage 2 Feature Analysis, dated 21 August 2009 (filed August 2009)
- **ESWG Consensus Report ESRE0050** (i.e., TIF 59): Deployment of Stage 2 Features for E9-1-1 Implementation - In Call Location Updates, dated 2 August 2009 (filed August 2009)
- **Telecom Decision CRTC 2009-697:** CISC - Stage 2 features of wireless Phase II E9-1-1 service implementation, issued 6 November 2009

- **ESCO0336 (TIF59):** ICLU Stage 2 PSAP Requirements, May 6, 2010
- **ESCO0338 (TIF59):** Response to ESCO0336, May 2010
- **ESCO0375 (TIF59):** 9-1-1 Service Providers' position on PSAP-initiated ICLU, February 11, 2011

- **ESWG Update Report ESRE0052** (i.e., TIF 58): Wireless E9-1-1 Phase II Stage 2 - Feature Analysis, dated 2 November 2010 (filed 10 December 2010)
- **Telecom Decision CRTC 2011-177**: CISC consensus report – Wireless E9-1-1 Phase II Stage 2 Feature Analysis, issued 11 March 2011

APPENDIX C TEST PLAN TEMPLATE

In Call Location Update Test Plan

Prior to beginning Test Case scenarios, WSPs to ensure PSAP readiness, IP Network capability and that the 35 seconds ICLU Timer is operational

PSAP name									
Test Case #	Test Scenario Description and Purpose(s)	Expectation(s)	WSP name Pass/Fail/Other		WSP name Pass/Fail/Other		WSP name Pass/Fail/Other		Overall Test Result(s) & Comments
			Wireless tech. used	Wireless tech. used	Wireless tech. used	Wireless tech. used	Wireless tech. used	Wireless tech. used	
ICLU 000	**Ensure ICLU services are operating to specifications:** Preliminary ICLU functionality/feature tests performed by PSAP to ensure Integrated Telephone System (ITS) / Computer Aided Dispatch (CAD) vendor's interpretation of the ICLU Interface Document was correct.	No operational software errors are experienced.							
ICLU 001	**Confirm ICLU operation:** PSAP Agent shall initiate an ICLU request after the initial Phase II location information has been delivered. Note, the ILCU feature shall only allow the ICLU request to take place 35 seconds after the original Phase II information has been received at the PSAP.	Phase II location information MUST be received by the PSAP Agent (Location Error responses may at times be considered a valid ICLU response. However, the expectation for this Test Scenario is that actual Phase II location information is received).							
ICLU 002	**Premature ICLU:** Initiate an ICLU request for an active call before initial Phase II has been delivered.	Should not be possible at the PSAP side as per the 35 secs ICLU Timer. *NOTE1: May or may not receive an error message*							
ICLU 003A	**Call transfer:** Test an ICLU request after 1st Phase II response received. Transfer call internally (within agency), but before ICLU response has returned. Test further transfers.	1st transfer should receive initial Phase II. Subsequent transferees should receive the ICLU location.							
ICLU 003B	**Call transfer:** Test an ICLU request after 1st Phase II response received. Transfer call externally (outside agency), but before ICLU response has returned. Test further transfers.	1st transfer should receive initial Phase II. Subsequent transferees should receive the ICLU location.							
ICLU 004	**PSAP redundant servers:** Verify that two rebid messages made from redundant PSAP CAD servers trigger only one ELIR request, and ALI responds correctly the same message to both PSAP servers.	PSAP servers should trigger only one ELIR request and return same message to both servers. *NOTE 1: If the trial PSAP configuration uses redundant servers, this test can be validated doing the Normal Case-see Test case ICLU 001.* *NOTE 2: This is a system test, not a user-based test-validation of this test requires access to the PSAP equipment logs.*							
ICLU 005	**Confirm the PSAP Agent receives updated (not cached) location information:** PSAP Agent shall request 5 consecutive ICLUs (1 every 35 seconds) to the mobile (i.e., moving) Wireless Service Provider's tester. *NOTE 1: WSP tester MUST BE mobile in order that the location response changes, thereby, providing proof that the PSAP Agent is not receiving cached (illegitimate) location information.* *NOTE 2: ICLUs performed by the PSAP Agent must take place at 35-second intervals.*	Different Location responses should be received by the PSAP Agent per ICLU request (Location Error responses are not the norm but may periodically be considered a valid ICLU response).							
ICLU 006	**Confirm consecutive ICLUs can be performed at the maximum rate (every 35 seconds):** PSAP Agent shall request 5 consecutive ICLUs (1 every 35 seconds) to the stationary Wireless Service Provider's tester. *NOTE 1: WSP Tester MUST NOT be mobile in order that RF reception conditions remain static, thereby not compromising or influencing ICLUs.* *NOTE 2: ICLUs performed by the PSAP Agent must take place at 35-second intervals. This is to provide proof that the system is able to do maximum rate updates.*	Common Location responses should be received by the PSAP Agent per ICLU request (Location responses need not be exactly the same but should be similar). Also, Location Error responses are not the norm but may periodically be considered a valid ICLU response.							

PSAP name									
Test Case #	Test Scenario Description and Purpose(s)	Expectation(s)	WSP name Pass/Fail/Other		WSP name Pass/Fail/Other		WSP name Pass/Fail/Other		Overall Test Result(s) & Comments
			Wireless tech. used	Wireless tech. used	Wireless tech. used	Wireless tech. used	Wireless tech. used	Wireless tech. used	
ICLU 007	**Confirmation on when location accuracy begins to become compromised (High Radius of Uncertainty) or the ALI errors are received:** Consecutive In Call Location Update requests performed at 5 second intervals less than 35 seconds. *NOTE 1: WSP Tester must be mobile in order that their location changes, thereby providing proof to the PSAP Agent they are not receiving cached (illegitimate) location values.* *NOTE 2: ICL Updates performed by the PSAP Agent must take place exactly at 5 second intervals.*	ICLUs performed before the standard 35 seconds should provide the PSAP Agent with increasing errors and invalid location responses.							
ICLU 008	**Handset battery impacts:** PSAP Agent performs repeated ICLU requests to determine the influence on the wireless handset battery charge in order to understand the influence ICLU requests will have on the battery life of the wireless handset. *NOTE 1:Tester must identify handset in general comments.*	ICLUs should not influence the battery charge to the extent the PSAP agent would need to be cautious on using the ICLU feature.							
ICLU 009	RURAL-Perform 2 or more ICLUs while caller is stationary in good coverage outdoors. This is a baseline test to ensure ICLU is working properly.	The locations and uncertainties should be approximately the same for the initial and subsequent ICLUs.							
ICLU 010	RURAL-Perform 1 or more ICLUs while caller is stationary in indoor environment.	The locations and uncertainties may vary greatly depending on indoor coverage and the building type that the tester is in.							
ICLU 011	RURAL-Perform ICLU while moving from outdoor to indoor.Obtain initial location while tester is outdoor, then move indoor and perform 1 or more ICLUs.	The locations and uncertainties should be different.							
ICLU 012	RURAL-Perform ICLU while moving from indoor to outdoor. Obtain initial location while tester is indoor, then move outdoor and perform 1 or more ICLUs.	Location and uncertainty should return different data than initial Phase II.							
ICLU 013A	RURAL-Perform ICLU while tester is in motion (WALKING).	Location and uncertainty should return different data than initial Phase II.							
ICLU 013B	RURAL-Perform ICLU while tester is in motion (RUNNING).	Location and uncertainty may return different data than initial Phase II.							
ICLU 013C	RURAL-Perform ICLU while tester is in motion (INSIDE SLOW MOVING VEHICLE-CITY TRAFFIC SPEED).	Location and uncertainty may return different data than initial Phase II.							
ICLU 013D	RURAL-Perform ICLU while tester is in motion (INSIDE FAST MOVING VEHICLE-NORMAL HIGHWAY SPEED).	Location and uncertainty may return different data than initial Phase II.							
ICLU 014	URBAN-Perform 2 or more ICLUs while caller is stationary in good coverage outdoors. This is a baseline test to ensure ICLU is working properly.	The locations and uncertainties may vary depending on outdoor environment.							
ICLU 015	URBAN-Perform 1 or more ICLUs while caller is stationary in indoor environment.	The locations and uncertainties may vary greatly depending on indoor coverage and the building type that the tester is in.							
ICLU 016	URBAN-Perform ICLU while moving from outdoor to indoor.Obtain initial location while tester is outdoor, then move indoor and perform 1 or more ICLUs.	The locations and uncertainties should be different.							
ICLU 017	URBAN-Perform ICLU while moving from indoor to outdoor. Obtain initial location while tester is indoor, then move outdoor and perform 1 or more ICLUs.	Location and uncertainty should return different data than initial Phase II.							
ICLU 018A	URBAN-Perform ICLU while tester is in motion (WALKING).	Location and uncertainty should return different data than initial Phase II.							
ICLU 018B	URBAN-Perform ICLU while tester is in motion (RUNNING).	Location and uncertainty may return different data than initial Phase II.							
ICLU 018C	URBAN-Perform ICLU while tester is in motion (INSIDE SLOW MOVING VEHICLE-CITY TRAFFIC SPEED).	Location and uncertainty may return different data than initial Phase II.							
ICLU 018D	URBAN-Perform ICLU while tester is in motion (INSIDE FAST MOVING VEHICLE-NORMAL HIGHWAY SPEED).	Location and uncertainty may return different data than initial Phase II.							
ICLU 019	Perform ICLU while tester is in motion and crosses a different PSAP boundary or tower. Would re-bid data ever have the opportunity to reach another PSAP?	This should not have any impact on data.							

PSAP name									
Test Case #	Test Scenario Description and Purpose(s)	Expectation(s)	WSP name Pass/Fail/Other		WSP name Pass/Fail/Other		WSP name Pass/Fail/Other		Overall Test Result(s) & Comments
			Wireless tech. used	Wireless tech. used	Wireless tech. used	Wireless tech. used	Wireless tech. used	Wireless tech. used	
Special cases Section **Verify that ICLU requests, made for roamers, ESCO and other special call types (As per Table 1 of ESCO0375) provide the expected result. *Must have a handset that is roaming in the PSAP serving area.** **Some test cases may be difficult to produce in a live environment. (See ICLU 020 to ICLU 028 test scenarios next)**									
ICLU 020	WSP places 9-1-1 call using a device set with an invalid 10-digit CBN and WSP network provides valid ESRD number.	Will receive MLP error code/no updated Phase II, upon rebid.							
ICLU 021	WSP places 9-1-1 call using a device set with an valid 10 digit CBN and WSP network provides valid ESRD number.	Will receive MLP error code/no updated Phase II, upon rebid.							
ICLU 022	WSP will place 9-1-1 call from device with NO CBN (empty), but WSP network provides valid ESRD.	Operator will receive MLP error code. Upon re-bid operator should receive additional MLP error code.							
ICLU 023	WSP will place 9-1-1 call with valid call back number but WSP network provides no or invalid ESRD (tower) number.	Operator will receive AQS error code from ALI. Will receive AQS error code when conducting re-bid.							
ICLU 024	Confirm ICLUs can be performed for SIMless (HSPA/GSM) or Unregistered (CDMA/iDEN) handsets.	PSAP Agent should receive a "911-XXX-XXXX" CBN format, a valid ESRD number and an updated location response (Location Error responses are not the norm but may periodically be considered a valid ICLU response).							
ICLU 025	WSP will place 9-1-1 call with special WSP-initiated "911-XXX-XXXX" CBN and WSP network provides NO or an invalid ESRD number.	Call taker will receive AQS error message, same thing if rebid done.							
ICLU 026	WSP will attempt to place 9-1-1 call using a device with an invalid CBN. Number recreated by 9-1-1 tandem switch as "NPA-911-XXXX", and WSP network provides valid ESRD.	Call taker will receive MLP error code message, same thing if rebid done.							
ICLU 027	WSP will attempt to place 9-1-1 call using a device with an invalid CBN. Number recreated by 9-1-1 tandem switch as "NPA-911-XXXX", and WSP network provides NO or an invalid ESRD.	Call taker will receive AQS error code message, same thing if rebid done.							
ICLU 028	WSP initiate a 9-1-1 call, but WSP network reverses the CBN and ESRD sequence. ESRD received before CBN.	Call taker will receive MLP error code message, same thing if rebid done							

GREEN	**Phase II should be OK end-to-end.**
YELLOW	**Mobile Location Position (MLP) type error to occur. The request should reach the WSP network level.**
ORANGE	**ALI Query Service (AQS) type error to occur. The request would likely stop at the 9-1-1SP ALI level.**
RED	**Should not be possible.**

APPENDIX D TIF59 WORKING GROUP NOTES

TASK IDENTIFICATION FORM (TIF)

Date Originated: Dec 4, 2008
Last Updated: Nov 27, 2012

WORKING GROUP: Emergency Services (9-1-1)

TASK #: 59 **File ID:** ESTF0059

TASK TITLE: Wireless Phase II E9-1-1 In-Call Location Update (ICLU)

TASK DESCRIPTION:

The October 31, 2008 ESWG report, "Technical and Operational Requirements of Wireless Phase II E9-1-1 Implementation" recommended, "*that the ESWG investigate the ability to provide mid-call location updates (Rebids) for inclusion in a future deployment such as stage 2*." Telecom Regulatory Policy CRTC 2009-40, released on February 2, 2009, requests the CISC to file a report on its findings to the Commission by August 2, 2009. This TIF will track discussions and developments associated with the above activities.

PRIORITY: M **CRITICAL PATH: N** **DUE DATE:**

CROSS IMPACTS: none

WORK PLAN AND TIME-FRAMES:
Report findings to CRTC by August 2, 2009

CURRENT STATUS: Ongoing

TASK ORIGINATOR: Gerry Thompson

TASK Owners: Diane Pelletier (New Brunswick),

TASK TEAM: Emergency Services (9-1-1) Working Group (ESWG)

ACTIVITY DIARY:

Serial	Date	Activity
1	2008 Dec 04	ESWG conference call. ESWG agreed to draft this TIF and to review it and assign a TIF owner at the January 2009 ESWG conference call.
2	2009 Jan 8	ESWG conference call. Mike Myette or Judy Broomfield may be TIF Owners; To be confirmed. Guy Caron and Chris Kellett volunteered to participate in this TIF. This TIF will be discussed at the regular ESWG conference calls and separate conference calls will be organized if they become necessary. It will need to be investigated to determine if location platform changes are required. Ed Antecol of Globalive raised questions about the support of wireless phase II E9-1-1 during a hand-off between domestic carriers. Gerry Thompson indicated that an intercarrier agreement is required to enable a soft handoff between the two WSPs. Francis Fernandes stated that during a soft handoff, the original switching system maintains control of the call. It was agreed that the scenario is worthy of a test case during implementation. In the event that the phase II functionality fails, phase I will continue to be supported. Keith Richardson recommended that the title be changed from "Mid-call" to "In-call" as it is a more accurate title. The suggestion was accepted by the ESWG.
3	2009 Feb 2	CRTC released Telecom Regulatory Policy CRTC 2009-40. Paragraph 22 of that decision states: *"The Commission considers that wireless Phase II Stage 2 E9-1-1 features would provide further significant benefits to PSAPs and consumers, and should be implemented as soon as technological solutions are available. To this end, the Commission requests that the <u>ESWG file a report within six months of the date of this decision</u> on its findings regarding the deployment of wireless Phase II Stage 2 E9-1-1 features. Upon review of this report, the Commission will specify the Stage 2 implementation requirements and time frames."*
4	2009 Feb 12	ESWG conference call. Mike Myette and Judy Broomfield confirmed as TIF co-owners.
5	2009 March to June 22nd	Numerous conference calls were held between PSAP members to discuss requirements on a national basis. Further discussion also held during national ESWG monthly calls.
6	June 22nd to July 31st	Report finalized for the Commission on Group Consensus approach for their consideration. Reference ESRE0050 (submitted August 1st, 2009)
7	2010 Feb 24 to 2010 March 8	In the Telecom Regulatory Policy CRTC 2009-697 released on November 6, 2009, the Commission noted the ESWG's recommendation that a PSAP-initiated request method be developed

Serial	Date	Activity
		and implemented by September 2012 as proposed in ESRE0050. The Commission had reviewed and approved this recommendation in the ESRE0050 consensus report. During the CISC ESWG call of February 11th, Francis Fernandes noted that it would be helpful if PSAPs could provide basic requirements in order to have a good start on this work. Judy advised she would coordinate a national PSAP representatives call in order to provide this information in March As a result, two conference calls were held between PSAP members to discuss requirements for Stage II on a national basis. A contribution was drafted for ESWG consideration.
8	2010 March 11	PSAP Contribution ESCO0036 was presented on the national ESWG Conference call. PSAPs were asked to further elaborate on the following items: a) Timing – would a preset timer per query be preferred (ie: 60 seconds) - Should the system ignore a request until new information is available and if that is the case, what indication, if any can be provided to a 9-1-1 Calltaker on the status of the query b) Type of data options, do PSAPs want to see cached information, current information or new information only. All three types may be possible as part of the MLP Options, but it needs to be decided as to what would be most useful. How would a 9-1-1 calltaker know the difference? These decisions will have to made fairly early in the discussions to establish the necessary network protocols as well as data circuit equipment design and upgrades PSAP members to set up a conference call to discuss and draft another contribution
9	2010 April 15	PSAP Conference call to discuss outstanding issues described above. ESCO0336 Redrafted for distribution to ESWG.
10	May 18,2010	Bell Mobility responded to issues identified within ESCO 0336.
11	July 27, 2010	PSAP Conference call to discuss configuration issues related to Bell Mobility proposal under ESCO 338 regarding timing and data requirements. While the technical direction outlined in the contribution were generally accepted by PSAP members, there are still some outstanding items. Items yet to be defined are as a follows: - Triggering mechanism specs and how the interface will actually work between the PSAP and the MLP. - Interface technology will need to function for use via either a phone key or CAD equipment. - System acknowledgement and/or error messages for PSAP end users - Migration Path where ILEC platforms need to be upgraded for ICLU functionality.

Serial	Date	Activity
12	November 9, 2010	**Triggering Mechanism Specs/Interfaces** Fadi Dabliz - provided an ILEC overview – their understanding is that the PSAP CPE will trigger an ICLU (with key or CAD request), the ALI receives the request and will process the information as is done today with any Phase II call. (ALI sends request to MLP and MLP sends back to ALI which sends it onto a PSAP). The function mimics what is done at the time of the original WL2 9-1-1 dialed call. Judy Broomfield asked if there is really anything further that the PSAPs can provide industry at this point. Fadi noted that details need to be flushed out a little more since Bell is working on a new transport medium. The PSAP tools will not change, regardless of the new network. Bell needs to finish their assessment and will come back to ESWG with the results of the assessment. Judy reminded the group of the time lines agreed to in ESRE050. One of the first deployment time lines , where 9-1-1 IP links exist is March 2011. Fadi indicated Bell will have nothing available before the New Year, especially with all the other ESWG activities. Judy asked that if the where the pipe exists today (IP Capable Territories etc.) is it easier to come up with specs based on that existing setup? Fadi - the medium is in place, but it is still unknown how to trigger (in Aliant Territory) the request and there will be some CAD issues. Pat Kelly noted they already have the capability to do reverse ALI and wondered if this would be the same type of the trigger? Fadi – It could be, but Bell is unsure of the medium we want to use and inquired if all Maritime Provinces have reverse ALI ? Diane Pelletier advised – Nova Scotia, PEI, yes, NB not yet but almost there. Glen Rosenberger – Telus 9-1-1 platform does have IP interconnections but to CAD RS232 Serial data ports. Telus will also continue their assessment and provide a contribution. NENA ASQ4.005 good basis for CPE solution and needs tweaking and may require some alterations to work in Telus Territory. **System Acknowledgement and Timers** Judy – ESCO 0338 (May 18) - Timing issue = 60 seconds (Bell Mo) PSAPs wanted 20-30sec. However the 60 seconds has to do with Bell Mobility managing their network which was not developed as a tracking system.

Serial	Date	Activity
		Discussion related to when does the 60 seconds start (with the 60 second timer) and how best to manage this timer. Guy Caron – Is there any PSAP feature to allow rebid key to enable or disable the timer functionality? PSAPs advised that since there is no need for this yet, so we don't have anything configured and we can't really answer. Judy inquired if the ALI can give error message or a please wait message or will those indicators come from WSPs. Pierre Foucault said the message should inform our calltakers when that network function is not yet available. Siv - MPC needs the 60 seconds. 9-1-1 is the original trigger, which gives request to the MPC, which then sends info to ALI and ALI sends to PSAP. Fadi - If request received before the 60 seconds, does the request get queued or not requested at all. Siv advised the MPC does nothing until timer expires. The trigger button should not be enabled again until there is the ability to make another request (at end of timer). Further discussion focused on the following questions/concerns: Who can initiate the timer, when packets delivered, or disable functionality etc.? Can CAD display that timer? Timer cannot impact CAD functionality when calltaker processing call information. If PSAPs have to wait 60 seconds, then send a request, how long do PSAPs have to wait to receive data? It could be up to another 50 seconds – depending on all factors. PSAPs must keep in mind that the information received could be better or could be worse accuracy or could produce an error message. 60 Second timer starts at receipt of data, NOT 60 seconds from time the original request has been sent. A handset can only host one request at a time and a 2nd request by secondary agency at the same time as the primary may impact delivery of the original request. Therefore, ICLU response will be provided solely to the position that first initiates the request, not to all agencies on the line. Tony Hui noted that a 9-1-1 call must always be in process for an ICLU request to occur. Upon disconnect, the WSP 24 x 7 support centre must be used. **Pilot PSAP – it is too premature at this point** **Next steps:**

Serial	Date	Activity
		Telus can have a contribution perhaps 3-4wks. Bell Canada may have one by mid December. In meantime, perhaps PSAP should speak to their vendors. Next Call December 14th., 11a.m. Eastern
13	Feb, 23, 2011	**Conference call** Single Agenda Item discussed – ESCO0375 – Guy Caron presented the contribution. The following questions, sections and comments were discussed. Section 1 – when asked to elaborate on the meaning of "timely fashion" Guy advised that they were unable to identify any fixed dates since the pre-conditions have not been confirmed. Minimizing risks was identified as a concern since generally speaking, any time you make a change to the 9-1-1 system there are always a potential risks. Section 2 – PSAP Equipment replacement will be necessary where the CPE currently has "push" only capability. (ie:VT100). In the future all PSAPs must be "pull" capable. In those PSAPs using phone sets only, if technically possible, the "pull" will have to be done in the background, making it a PSAP equipment responsibility. Section 3 – It is important to note that any Agencies not directly linked to the ALI will be unable to use the ICLU feature. (IE: Some Agencies in Aliant territory where ALI data is transported to the secondary's' utilizes internal networks to downstream data.). PSAPs and their vendors should refer to ESCO0375 as a guide for now but further development work makes it premature to use as final technical spec document. The ICLU feature will provide a new packet of data which will be delivered based on the original Call taker position ID, as happens today. This will mean continual repeats of the ESRD information provided in the first packet with the new coordinates delivered each time. This may become a data storage capacity issue for PSAP record management systems. It was further noted that while the 9-1-1 caller may be moving and their cell signal relayed from a new towers during the call, only the original static ESRD record will continue to be relayed. PSAPs will have to rely on the updated coordinate data to determine new caller location, direction of travel etc. This will be a PSAP training issue as it will become apparent that the caller location will appear further and further away from the originating ESRD address. Section 3.4 – Should a call taker accidently attempt to "rebid" on a

Serial	Date	Activity
		wireline call, this may produce an Error message from the ALI, however PSAPs have to be cautious as this may erase the original information on their screen. Section 3.6 – Industry is looking to PSAPs to provide input into the anticipated forecast demand for the ICLU service so that carriers can provision their networks. It is unclear at this time how PSAPs might contribute. It was suggested that NENA has some experience to reference. PSAPs suggested that the wireless industry may determine a baseline requirement based on the number of verbal requests made today via their 24 x 7 9-1-1 Support Centers. Section 3.9 – The ICLU feature will only work for those PSAPs and their secondary's that are AQS capable. There may be areas where the Primary PSAP has the functionality but not their secondary downstream Agencies. Operational/procedural cooperative efforts between two differently equipped centers will need to be determined locally. Section 3.11 - Timers – extensive discussions under this section related to the technical capabilities of the Wireless MLP and the management of these timers by the PSAP equipment and/or staff. Areas of debate included: - The necessity of the PSAPs to wait 60 seconds if the requested response was returned in a lesser time frame (IE: response received at 20 seconds, why would PSAPs have to wait an additional 40 seconds prior to requesting again.) The cycle has been completed and the MLP is not searching for anything further on that call. - There was some confusion over the impact of multiple agencies making subsequent ICLU requests on the same handset number during the same 9-1-1 call. **Note :** The following clarification on this issue was provided in an e-mail on February 25th from Siv Mohan, Bell Mobility: " After the TIF 59 call on Wednesday Feb 23rd , I followed up with our E-911 location solution vendor and confirmed the call flow of ICLU. Both CDMA and UMTS Location platform vendors are confirmed that "only one location calculation process can be initiated at a time for a specific MSISDN (phone number)". We don't support multiple location calculation at the same time for a specific phone number. All the subsequent requests will be hold or responded with "location failure" message until the first location request is completed. This explains what I was stated during the meeting. However the location platform responses may differ with the network environments (CDMA and UMTS). For CDMA, If the location platform (MPC) receives more than one

Serial	Date	Activity
		location requests for a specific MSISDN, It will process the first request and hold other requests until it receives response from PDE for the first request, then MPC sends the same response to ALI for all the requests it received during the call process period. The response could be a successful x,y coordinates or a failure message. The server will not initiate a second location calculation request, while the first location calculation in process. For example, the below diagram shows five location requests sent by PSAP (t1, t2, t3, t4, t5) during the call processing time and the location server initiated the location calculation for only the first request which received at the time t1. The MPC will hold all other subsequent requests (t2, t3, t4, t5) and then once it receives the location calculation response for the first request from the PDE/SAS at time t6 then it send all the responses back to PSAP/ALI at time t7 with the same result of the location calculation response at t6. If the platform receives another request after the response at time t7, it will initiate a new location calculation request to PDE/SAS. For UMTS : The call flow and location calculation requests are same as CDMA and “only one location calculation process can be initiated at a time”. However the response from the GMLC to ALI may be different from CDMA environment. It may not hold the requests t2, t3, t4, t5 until it receives the location calculation response by SAS for the request at time t1. The GMLC may send the “location method failure” response message back to ALI for the requests t2,t3,t4,t5 as soon as it receives the requests. I am still in the process of confirming the responses for UMTS call flow with the vendor. “ 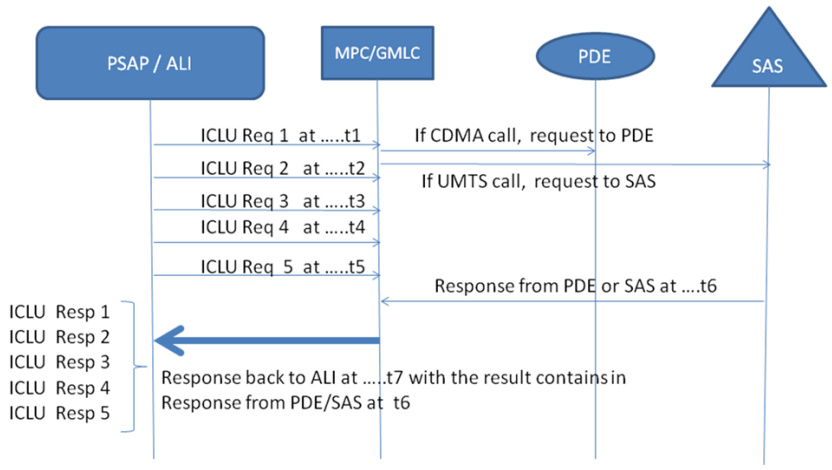 Section 3.4 – The timelines of the technical trial in the Maritime region cannot be determined until there is final consensus between the PSAPs, ALI Providers and WSPs on the final design.

Serial	Date	Activity
		PSAPs will be reviewing the ESCO0375 proposal and will respond to any concerns in a further contribution to the ESWG.
14	August 30, 2011	**Conference Call** **Participants:** Tim Armstrong; Fadi Dabliz; Pierre Foucault, Guy Caron, Glen Rothenburger, Bernard Brabant, Jean-Michel Dupuis, Peter Lang, Pierre AbiNader, Rob Sired, SinD Roy, Siv, Ken Sluman, James Ndirangu, Janice McMillan, Tom Paniak, Pat Kelly, Rob Popien, Tracy Finn, Chris Holigroski, Kaci, Carlo, Tony Hui. TIF group refreshed itself on previous documentations and submissions related to this TIF; mainly, ESCO0338, 0375 and 0379 and TIF notes reviewed. We discussed activities to date and reaffirmed that pre-requisites and protocols described in ESCO0375 should be used as is to initiate a trial of the PSAP-initiated ICLU feature. Of the Maritime provinces PEI`s 911 PSAP is ready to start the trial. Their call management software vendor (Combix) is engaged and working on providing an interface that would allow operators to request ICLU. A small sub-committee with representation from PEI, NB, Bell Aliant, Bell and Rogers has been struck to develop the trial plan and logistics toward a start. First meeting September 1, 2011. Next TIF 59 conference call will be scheduled in early October once we can provide further updates on the trial and expected timeframe.
15	October 4, 2011	**Conference Call** **Participants:** Tim Armstrong; Guy Caron, Glen Rothenburger, Bernard Brabant, Jean-Michel Dupuis, Peter Lang, Rob Sired, SinD Roy, Janice McMillan, Pat Kelly, Chris Holigroski, Kaci, Carlo, Janet Nickerson, Tina Lowenberger, Lisa Bruce, Tony Hui, Darrell Marsh, Group review and approved TIF 59 Activity Diary, Serial 14. It was suggested and agreed that we would add the participant list to each meeting notes. The TIF sub-committee presented an ICLU Test Trial Plan document which will now be discussed and refined by the entire TIF 59 group at subsequent meeting leading up to the start of the trial. The sub-committee will no longer be required to meet at this point. Status of Trial Prep: • Pat Kelly advises that he's run into a financial delay to initiate the trial prior to December 2011. The quote from his vendor to enable PSAP-initiated ICLU is higher than his current fiscal budget allows, therefore he has requested funding for next fiscal. A decision on this should be available by end of November 2011 at which time he could conceivably have the vendor develop the interface in early

Serial	Date	Activity
		2012. He does not at this time anticipate that the budget allocation will be denied, but in though economic times the possibility of denied funding is always possible. • Possible backup plans were discussed but ultimately the following pre-requisites still prevail and PSAPs must be in push mode to migrate to IP links in order to be able to use wireless ICLU, and the PSAP equipment must support IP and XML. • Nova Scotia is currently in negotiations with new vendor to upgrade their 911 call management system therefore they cannot envision a trial at this point. • New Brunswick has its IP links installed at the PSAPs but not yet operational. Working with CAD vendor Versaterm to develop the IP interface to enable connectivity in that format, then an interface can be envisioned for ICLU. That is several months away. There is a possibility that the Saint John PSAP vendor, Sunguard is IP ready but waiting on feedback from PSAP and vendor to determine if there is any possibility of doing a trial there. This PSAP is also planning a location move in the new year therefore it may not be something they want to add to their plate. Remains to be seen • Bell is to have IP connectivity to Quebec and Ontario PSAPs available by September 2012, but that doesn't mean that vendors and PSAPs will be ready to move to those links. All a matter of funding and budgets. • Telus is using IP to the PSAPs, but PSAP equipment still using RS-232 interfaces. PSAP equipment needs to support IP interfaces and XML protocol. • MTS currently has an ICLU capability, due to their PULL functionality. It is unclear if it complies with NENA AQS standards? • Ultimately the trial is required to develop, test and publish interface specifications for disclosure document to PSAP equipment providers. There are multiple vendors with distinct perspectives. • The Maritime provinces are still thought to be the best locations to initiate these trial sooner than anywhere else. **Conclusion**: At present the ICLU TIF 59 group believes it may be necessary to push out the schedule by approximately 6 months. It is anticipated that the earliest a trial could begin somewhere in one of the Maritime provinces would be March/April 2012 timeframe. Therefore in order to allow enough development time for vendors, once the specification documentation is disclosed, it is more likely that a method can be developed and implemented by March 2013 as opposed to September 2012 as indicated in ESRE0050 and agreed to by the Commission in Telecom Decision CRTC 2009-697. The issue will be brought forward at the next ESWG meeting scheduled for October 13, 2011. The next meeting of the TIF 59 Group is set for November 8, 13h00 – 14h00 (EST).
16	November 8, 2011	**Monthly Conference Call** Attendees: Bernard Brabant, Greg Burdett, Pierre Foucault, Tony Hui, Pat Kelly, Peter Lang, Siv Mohanraj, Rob Popien, Glen Rotherburger,

Serial	Date	Activity
		SinD Roy, Rob Sired, Ken Sluman, Tim Armstrong, Carlo Chiavaroli, Diane Pelletier TIF notes from October 4th meeting approved. **PSAP Trial Readiness:** PEI: Request for capital funding in the provincial budget process has been requested but a detailed proposal from the vendor is required for justification. Pat awaiting vendor response on this ask. Pat confirmed that wireless test calls have been performed in PEI confirming that a pre-trial test environment can be achieved as envisioned. NB: No new development. Working with Fredericton PSAP to upgrade the CAD infrastructure and Versaterm is working on the IP and ICLU interface but no set timeframe is in place. Definitely nothing on the horizon until sometime in 2012 at the earliest. Saint John has run into some technical delays with their CAD vendor, Sunguard, for IP readiness. Diane awaiting response on potential ICLU trial and timing. NS: Not available for call today, but no new indication that they could host a trial. **ICLU Technical Trial Plan Document:** It was determined and agreed that without firm trial dates the group is not able to focus on the actual test plan and test cases. The TIF 59 group will continue to touch base on a monthly basis for status updates from the Maritime provinces until such a time as we can put dates in the calendar for the anticipate pre-trial and trial starts. At that time the group will focus their energies on finalizing the Technical Trial Plan Document. **Next Meeting:** December 6, 2011, 13h00 EST.
17	December 6, 2011	**Monthly Conference Call** Attendees: Tim Armstrong; Bernard Brabant, Pierre Foucault, Guy Caron, Gail Jones, Glen Rotherburger, Greg Burdett, Jean-Michel Dupuis, Tina Lowenberger, Peter Lang, Rob Sired, SinD Roy, Siv, Ken Sluman, Tony Hui, Diane Pelletier Nothing to report in terms of confirming a trial location in the Maritimes. Guy Caron reported that Bell Canada in collaboration with Bell Mobility are conducting tests based on contribution ESCO0375 for CDMA and UMTS. The intent is more to test from an ALI rather than a PSAP to ALI perspective. The purpose of this testing is to firm up and finalize the specs for ICLU so that these can be distributed to Vendors for ICLU interface development. The testing for CDMA was completed this week in Halifax, and there are plans to test UMTS the week of Dec 12th. The results will be turned into a contribution and review hopefully at our next monthly meeting if available. This testing does not remove the need for trial ICLU from a PSAP, but it does prove ALI to MLP and "some" PSAP to ALI functionality The appliance used is a piece of code emulating a PSAP and it does allow to simulate and continue to work toward firming up the Bid 13 Specs for ICLU. Guy offered that Bell could most likely accommodate any other WSP

Serial	Date	Activity
		who wishes to conduct similar testing for there service and they can call him to coordinate. Still some ambiguity or questions within the group with respect to the 60 second rebid interval and whether or not this is fixed, or can it be variable depending on the MLP response time. The group will keep this as an open item but will require further clarification and specifications within the trial environment. Next meeting scheduled for January 10, 2012, 13h00 EST.
18	January 10, 2012	**Monthly Conference Call** Attendees: Tim Armstrong; Bernard Brabant, Pierre Foucault, Guy Caron, Jean-Michel Dupuis, Peter Lang, Rob Sired, SinD Roy, Siv, Ken Sluman, Tony Hui, Chris Holigroski, Tom Paniak, Tony McCarthy, Diane Pelletier Status Update on initiating a trial in the Maritimes: • No update from NS • Status quo for PEI. Waiting on budget. • Saint John PSAP in NB is working on moving to IP platform for ANI/ALI delivery in the near future. Once that is established and functional Diane will address a trial possibility with this PSAP and their Vendor. Very likely that this would not happen until after Q2 of 2012. The PSAP is also working on a Centre Relocation project and they may or may not be able to envision a trial project. It was asked whether having just one PSAP designated as a trial site was sufficient, which it is. The trial is not to test the various types of equipment in the PSAP, but rather the functionality of ICLU initiated request from the PSAP. Guy Caron indicated that the test being conducted internally at Bell, as described during the Dec call have been completed, but compilation of results is needed. There was on issue detected which is being investigated by Bell. Rob Sired indicated that Telus is also interested in conducting the same tests using Bell's appliance. He will be contacting Guy to coordinate this. It was suggested by Guy Caron that we open up an action item log (#6) to track the rebid timing issue to resolution. As noted in December there is still some concern with a proposed 60 second interval required between rebids. The WSPs were invited to submit contributions to clarify whether the rebid interval needs to be fixed at 60 secs or could it be variable. Contributions should be in to Diane by February 10th so that they may be reviewed and discussed with the TIF 59 Group during the February 14th monthly meeting. Bernard Brabant indicated that he would provide some information from the State-based Emergency Services Interconnection Forum (ESIF) group to assist in reviewing this question. (info forwarded to TIF 59 group Jan 11) Next monthly meeting will be February 14, 11h00-12h00 EST.

Serial	Date	Activity
19	February 28 and	**Monthly Conference Call** Attendees (Feb 28): Tim Armstrong; Bernard Brabant, Pierre Foucault, Guy Caron, Jean-Michel Dupuis, Rob Sired, SinD Roy, Siv, Zahir Shah, Tina Lowenberger, Greg Burdett, Carlo Chiavaroli, Kaci, Janice McMillan, Tony Hui, Chris Holigroski, Tom Paniak, Tony McCarthy, Diane Pelletier **General Update:** • Maritime PSAP are still not ready or able to initiate a trial in the region, but work continues toward that goal. • Guy needs to collate the testing results from within the Bell lab before he can put a contribution forth to the group. • Rob indicated that Telus is still wanting to use the Bell lab to conduct their own testing but a time has not been set yet. **ICLU/Rebid Interval Contributions Review:** • 3 contributions received so far from Telus, Rogers and Videotron • All contributions were reviewed and discussed. • Infrastructure setup at Rogers results in a firm recommendation of 60 sec interval. Each call results in two redundant requests to each MPC/GMLC. Even if a successful response if received at the PSAP, the redundant query could still be processing and in the end result in failure from the premature ICLU request. • Telus is suggesting that it would be possible to generate ICLU rebids as soon as a response if received at the PSAP. • Rob further described that having error codes such as "Premature Request Error" or "Duplicate Request Error" as a safeguard to prevent the MPC/GMLC from receiving concurrent ICLU requests.the original Phase 2 response. • Guy indicated that although these two messages are standards in the NENA AQS Standards, they are not specific to ICLU and can be used for other enabled features; resulting in potential confusion depending on the CPE environment. • Kaci discussed Videotron's presentation contribution and it was determined that the idea had been discussed in the early development of this TIF and it was deemed unsuitable for ICLU and dismissed as an idea. Kaci asked that the contribution as presented be retracted. • We ended the meeting without any concensus and agreed to reconvene on Tuesday March 6th, 11:00 EST. This would allow other providers the time to submit contributions to Diane prior to that meeting. The purpose of the meeting will be to reach concensus on a ICLU/Rebid Interval Time.
20	March 6, 2012	**Conference Call continuation of February 28th call** **Attendees:** Tim Armstrong; Bernard Brabant, Guy Caron, Jean-Michel Dupuis, Rob Sired, SinD Roy, Carlo Chiavaroli, Kaci, Janice McMillan, Tony Hui, Chris Holigroski, Peter Lang, Gail Jones, Craig Marshall, Francis Fernandes, Stephen Lau, Pat Kelly, Diane Pelletier This was a continuation of the February 28 call. Pierre AbiNader presented Eastlink's contribution to the group, which

Serial	Date	Activity
		was followed by Q&A for clarification and understanding. In their contribution they focused on A-GPS technology and determined that a minimum of 50 seconds would be an acceptable time limit, through proper provisioning. They further advise that immediate rebid would significantly load up the network resources, and that multiple rebids result in a rapid drain of the handset battery when performing A-GPS locates. Bernard asked if there was a specific study or report that leads to that conclusion of battery depletion. Pierre believes there such documentation and will provide that information. Through discussions and information exchange we did confirm that the 60 second wait is associated with the initial call to 911, not 60 seconds after the initial delivery of location information. Therefore the real question which we need to reach consensus on is: *"How long do PSAPs have to wait after the initial delivery of coordinates?"* • *It has been suggested by some parties and agreedt by most that a 35 second wait time seems to be reasonable wait time. Delay of 35 second wait time needs to be confirmed.* March 20th meetings to be discussed at March 20th meeting. • Francis suggested that a consensus question be circulated to the TIF 59 members to get a yea or nay on that 35 second timer. Diane and Francis will formulate a question and email it to the group. If WSPs do not agree they will be asked to provide comment as to why that is. Question will be circulated by end of week. From a PSAP perspective Gail and Diane indicated that this seemed like a reasonable lapse of time to wait before initiating a rebid. It is very probable that during this time operators would be busy talking to the caller and collecting information that would lead them to making a determination that they will need to rebid to get a new location. It was noted by Gail and generally agreed that having the feature in itself as a tool is more valuable to operators than debating seconds and risk not getting information at all should the rebid fail if initiation was done too quickly. All agreed that when the time comes for ICLU to be enabled there will definitely need to be a training and awareness for operators on the proper and efficient use of the feature. i.e. they need to understand things such as draining the phone batteries with every ICLU, and that ICLU is not associated with getting better accuracy. Pat Kelly announced that he has the funding to go ahead and get the 911 CPE in PEI configure to initiate ICLU. He is looking at a timeframe of early May for a trial start. Pat asks that WSPs indicate whether this timing is good for them or not. Bell Mobility had confirmed their participation in the past and Tony reaffirmed that. Guy indicated that having multiple WSPs participate is desired, as the trial will provide the platform to assess performance not only from the PSAPs perspective but also from the WSP infrastructure perspective. Pat asked whether ESCO0375 is still the final document that provides

Serial	Date	Activity
		all the necessary data to enable his vendor to start building its interface. It was confirmed as such. The latest BID 13, Appendix 7 v. 13 document is the other resource to use. Now that a trial time is near the group will escalate its meeting times to resume discussing and finalizing the ICLU Test Trial Plan. There will be four consecutive bi-weekly meetings starting March 20th at 11:00 EST. Diane will set up the recurring meetings.
21	March 20, 2012	**Conference Call** **Attendees:** Bernard Brabant, Guy Caron, Jean-Michel Dupuis, Rob Sired, SinD Roy, Carlo Chiavaroli, Kaci, Janice McMillan, Tony Hui, Chris Holigroski, Peter Lang, Gail Jones, Craig Marshall, Francis Fernandes, Tina Lowenburger, Tracy Finn, James Ndirangu, Siv, Pat Kelly, Diane Pelletier Diane opened the meeting with reviewing documentation sent. It was questioned whether or not all providers had been asked the consensus question. It was agreed that providers are aware of the TIFs being dealth with by ESWG, therefore, should they wish to participate the onus is on them. Discussion and confirmation of the official BID 13 document release by Bell. Guy confirmed that the newest posted release is Version 15 for all 911 Serving Territory. BID 13, Appendix 7, Version 13 is an the unofficial DRAFT only released in the Maritimes for IP-VPN Platform. Telus confirmed that there is a similar document posted on website. Consensus Questions (35 Second Timer) Contributions were review, discussed without any final conclusion. Many good points, suggestions and questions were raised but in the end we ran out of time to clearly identify the best possible timer that will satisfy all parties both technically and operationally. Essentially all providers, except Rogers seem to be able to support rebid at 35 seconds. Rogers can support 45, and this is due to the redundant simultaneous feeds. Rogers was asked if they had any intention of discarding the second feed once the first feed has responded. Jean-Michel said that at present there are no plan to initiate such a change. There was not sufficient time to review Bernard's contribution. Bernard indicated that he would convert his document into a formal contribution and submit is as such. We will review during the April 3rd. The PSAPs are of the opinion that the trial should look to test the 35 second timer. If testing at that interval proves problematic more often than not, then we can look to extend the timer. Based on the interactions and discussions of the group it would seem that the likelihood of a PSAP experiencing a failure of the rebid at 35 seconds would be the exception rather than the norm. Discussions will continue on April 3rd at 11:00 EST, usual conference bridge.
22	April 3, 2012	**Conference Call** **Attendees:** Bernard Brabant, Guy Caron, Jean-Michel Dupuis, Rob Sired, SinD Roy, Carlo Chiavaroli, Kaci, Janice McMillan, Tony Hui,

Serial	Date	Activity
		Chris Holigroski, Peter Lang, Gail Jones, Craig Marshall, Francis Fernandes, Tina Lowenburger, James Ndirangu, Siv, Tom Paniak, Tim Armstrong, Gail Jones, Glenn Freer,Diane Pelletier Diane opened the meeting with a review of agenda, TIF notes, including action register open items and contributions log. • TIF note was approved as is. • Action Item #8 : SinD will check with Pierre to see if he has the documentation to support the claim that multiple rebid for A-GPS locates will drain the battery. This item was discussed briefly and Bell Mobility indicated that he had done some testing with varying results ranging from a 20-90% drain on battery. Many factors can impact battery usage; i.e. screen display, GPS fix vs idle, etc. • Contribution log items confirmed. Jean-Michel advised the group that a new Rogers contributions would be logged shortly supporting a 35 second rebid timer. With that information the group was then able to confirm and agree that: • The anchor point to start the clock on the timer would be at receipt of location information on the CPE screen at the PSAP. • From that anchor point a rebid can be initiated by the operator 35 seconds following receipt of location information at the CPE. Serials 6 and 7 in the Action Register can now be closed. With that issue resolved the group proceeded to review and discuss the ICLU Test Trial Plan v1 document. Several good points/questions were raised and discussed by the group. Noted comments included: • Should all WSP participate? All devices per providers should be tested. • Will the trial support wireless roamers? That may be dependent on the environment, whether it is push or pull. • WSP are ready to support the indicators “Initial” or “Current”, as the AQS will indicate, however, it is vendor dependent at this point to determine if this will be displayed to the operator or not. • There is concern and confusion re the pre-trial and trial approach which may result in unnecessary duplicate work. Trial parameters, a project plan and lead definitely need to be firmed up. This will require the assistance of Pat and the Bell Aliant Team (Janet/Tim). Since they weren’t present on the call Diane will inform them of the call outcome and discuss the need for a pre-trial. As well, there is a need to Project Manage this trial, and it was felt that Bell Aliant would be best suited to take on the project management aspect of the PEI trial. Diane will also discuss this with Tim, Janet and Pat. • Test Case Development: The participants have an opportunity to develop test cases. Contributions listing desired test cases should be submitted to Diane as soon as possible so we can establish and start reviewing a compilation of desired/required test case scenarios. As a starting point, it is suggested that the

Serial	Date	Activity
		current T911 Test Cases can be reviewed as some may apply to the ICLU test, or WSP can develop their test cases from scratch as they see fit. As soon as test cases start coming in to Diane a spreadsheet can be prepared so the group can start reviewing and discussing. See Action Register for current open action items for all participants. Next Conference Call set for April 17, 2012 – 11h00 – 12h30 EST.
23	April 17, 2012	**Conference Call** **Attendees:** Bernard Brabant, Guy Caron, Jean-Michel Dupuis, Rob Sired, SinD Roy, Carlo Chiavaroli, Tony Hui, Peter Lang, Gail Jones, James Ndirangu, Siv, Tim Armstrong, Pat Kelly, Tracy Finn, Sandy Burrell,Diane Pelletier TIF note reviewed and approval. Diane provided an update re discussions with PEI and Bell Aliant. She advised that the term "pre-trial" as identified in the Trial Plan document is really intended to be a test of the PEI PSAP readiness with their equipment, and that the equipment is performing as per the intended specs. It does not require the participation of all WSPs. Bell Aliant/Bell Mobility can provide the necessary testing rigors to assure Pat that his PSAP is ready to start accepting live test calls from the participating WSPs. Once that is confirmed, then the WSP Network Interconnections can be tested in a live trial environment. The question with respect to assigning a Project Manager (proposed to be Bell Aliant) has not been resolved. Tim and Diane will discuss with Glenn Crew, Bell Aliant 911 Product Manager to determine possibilities. Pat anticipates that he will be ready to test his CPE for readiness by May 1st, and will allow for 2 weeks to complete that internal testing with Bell. It is expected that the ICLU Trials with each WSP could start as early as May 28th. Test case scenarios should be ready for discuss and agreement by May 1st. to be ready for May 28. Diane reviewed amended Trial Plan Document with the group. A cleaned up version will be circulated prior to the next conference call. The group then concentrate on the actual trial and testing requirements. Bernard questioned Guy to clarify if and what changes are required from the WSPs and the ALI interface with regards to supporting rebid using the ALI AQS? Guy indicated that there is only a slight difference in the protocol to support rebid in MLP and ELIR location type from "initial" to "current". The WSPs must be able to receive a loc_type of "current". Each request must start from scratch and cache location is not acceptable. If there are any issues encountered with this during the trial it should be monitored and any errors should be reported.

Serial	Date	Activity
		The group then focused its attention on testing requirements, outcomes and expectations. The PSAPs need to know what to expect when an ICLU is performed. Operators will need training on reading initial data against current data to determine direction, and even validity of information received. We need to know what are error message and how to deal with those, i.e. do we try another rebid after a further 35 seconds to see if a result is returned. The WSPs have their own individual set of technical trials that they normally conduct to test technical performance particular to each WSP. These are proprietary in nature and usually not shared in a forum such as this. The WSP would like the PSAPs to provide input on specific test case scenario requirements to test operational efficiency and of value to PSAPs. Diane will organize a PSAP call to discuss and start developing a contribution for discussion. There was some back and forth within the group with respect to test results and the reporting of those results. It was agreed by most that performance measures and data comparisons are required if we are to assess the value of the ICLU feature. We still need to determine what is acceptable in terms of percentage of error returns when performing an ICLU. Test cases should focus only on features that we know are successful in Phase I and Phase II, Stage I. The question of ICLU vs Location Accuracy was raised. PSAPs feel that there is not much benefit to conducting an ICLU if the accuracy of the initial data is useless. Given what we know right now, many of the coordinates that come into the centre have no value to the operators. Although the intent of the trial is to test and confirm the specification for an ICLU interface and feature capability, it does beg the question as to why we are testing a feature of in-call location update if the accuracy can't be trusted. *April 24, 2011 – PSAP Group discussion to develop test case scenarios resulted in more discussions and concerns with respect to location accuracy. It is already understood that ICLU can be achieved, however there is serious concern that monies will be spent by PEI and other PSAPs to develop the ICLU feature interface and the resulting coordinates will be no better than the initial or could result in more error messages as opposed to actual new locations. The end result will be a feature that doesn't add value to the PSAP, and will still result in operators calling the 24/7 WSP support group to pinpoint a more accurate location.* *Subsequent to that call Diane and the PSAP group discussed the PSAP concerns with Chris Kellett, as TIF 69 – Location Accuracy owner. There is a general understanding, with some reservations, that the ICLU trial results will not only serve to implement the feature but will also be the opportunity to develop policies and procedures for training of operators in our PSAP on location coordinates and how the information from the data and the caller can be used to improve on location accuracy while in-call. i.e. if an operator is getting a certainty*

Serial	Date	Activity
		of a kilometer, but can ask the caller to step outside of a building and do a rebid, and that rebid results in an accuracy change of a few meters then operators will learn to address some of these location accuracy concerns. On the flip side, if the results consistently return useless information or errors reports during the trial, this will highlight the need for the improvements on the WSP side. *The PSAP group will provide a contribution identifying required test case scenarios to the WSP. The PSAP and WSPs can work on conducting the tests and providing outcome reports. This contribution will not be ready for May 1st meeting, but should be ready for the Face to Face ESWG meeting May 10-11th.* Next TIF 59 bi-weekly conference call will be held May 1, 2012 at 11h00 EST, usual conference bridge.
24	May 1, 2012	**Conference Call** **Attendees:** Bernard Brabant, Guy Caron, Jean-Michel Dupuis, Rob Sired, Carlo Chiavaroli, Tony Hui, Peter Lang, James Ndirangu, Siv, Tim Armstrong, Pat Kelly, Tracy Finn, Janet Nickerson Glenn Freer, Chris Holigroski, Tina Lowenberger, Craig Marshall, Tom Paniak, Fernando Martinez, Diane Pelletier Diane started reviewing the TIF note, Serial 23 with the group. The question of assigning a Project Manager to oversee the trial (i.e Bell Aliant) has not be finalized. Diane and Janet to discuss off-line and have a conversation with Glenn Crewe about it. Diane also advised that during the PSAP conference call last week the PSAP group expressed their concern that money would be spent on developing a feature that may not be useful to the PSAPs, given that we have experience already with inaccurate coordinates being received. There is a sense that from the WSP perspective their focus is on testing the feature and making sure that a rebid returns a result, whether that be a new coordinate or an error. We know the feature should work, but to the PSAP, if the information returned has no value, what's the point? It was suggested by the PSAP group during that call that perhaps TIF 59 and 69 should be blended, or the issue of accuracy should be resolved first, before ICLU. Some subsequent discussions and email exchanges occurred with Chris Kellett on that subject. The idea of combining the two TIFs is not desirable and there is merit and worth in continuing with the ICLU trial. It will provide valuable information and awareness of the issues, as well as provide the necessary information to develop training and policy information for PSAP to train operators on best practices and use of the ICLU feature. The information that Diane shared with the group led to a good discussion from the TIF 59 group on the purpose of the trial. Everyone agrees and understands what the trial intent is, but we also understand that the operational testing that will be required by the PSAPs will also provide data and information relevant and helpful to the TIF 69 accuracy focus.

Serial	Date	Activity
		PSAPs experiencing issues with current WSP location data should share the data and concerns with the respective WSPs for appropriate followup. During the trial the data can be shared with individual WSPs for analysis. It will be valuable information to have and to analyze, with a view to collectively improve where applicable. PSAP Readiness: In light of the PSAP discussions last week, Pat had put the vendor work on hold, but he has not cancelled the trial altogether. Therefore the PSAP is not ready to test its readiness as per the original May 1st proposed. New dates will be discussed as soon as possible and provided to the group. Diane will look to coordinate a PSAP Mtg asap. The PSAP group will provide a contribution with proposed Test Case Scenarios for discussion at either the face to face, or at the next TIF conference call. TELUS test case contributions were provided. If other WSPs have specific contributions to make they should do so and send them to Diane for compiling and distribution. Next set of recurring conference calls set at bi-weekly intervals, starting with May 15, 11h00 EST.
25	May 30, 2012	**Conference Call** **Attendees:** Bernard Brabant, Guy Caron, Jean-Michel Dupuis, Rob Sired, Carlo Chiavaroli, Tony Hui, Peter Lang, James Ndirangu, Siv, Tim Armstrong, Pat Kelly, Tracy Finn, Craig Marshall, Mauricio Humer, SinD Roy, Gail Jones, Pierre Foucault, Diane Pelletier Diane asked for any comments or corrections on Serial 24 for final approval. The Action Register was also reviewed. Serial 8 is still open and SinD said that she would followup with Pierre AbiNader to see if document was available to the claim that multiple ICLU would drain battery life of the wireless device. During the call she reported the following to Diane *Pierre advised that he had requested documentation from the vendor on the subject. They didn't have documentation; it was merely an observation they made during their own testing with a variety of handsets. The batteries were drying out faster while doing frequent GPS positioning. When GPS positioning was not used, these handsets had a slower dry out rate. The vendor noted that there are documents concerning this subject that can be googled. They did not name any sources, nor how authoritative those sources might be.* For the purpose of the trial and since this scenario is subject to many variables as well as devices and technologies this Action Register will be closed, however, the group agrees that this can be tested by WSPs when completing the test case ICLU 008 of the ICLU Test Case Scenario Document. Action Register 8 will be closed. TIF Note approved. It was clarified that the TIF 59 PSAP participants had met on May 25th to review and discuss the test case scenarios proposed as part of the trial, with the intent that the document would be distributed for reviewed and discussion with the entire TIF group at today's call.

Serial	Date	Activity
		Pat advised that June 4th was to be the start of their internal testing of the interface and ensure readiness for each of the WSP to start the trial tests. It is anticipated that this could take a couple of days, perhaps more if issues are encountered, however, it was felt that the WSPs could start testing as early as June 11th. The following schedule is proposed, but could be shortened depending on how quickly each WSP can complete the test cases: Dates | WSP | Contact June 11-15, 2012 | TELUS | WSPs to contact Pat to determine specifics June 18-22, 2012 | Rogers | " June 25-29, 2012 | Bell | " Should the WSPs need to adjust their planned schedule, or should the testing be progressing at a faster rate and Pat and the WSPs want to speedup the process to reach "Live" status sooner than June 29th, the parties will discuss when appropriate and adjust the schedules as necessary. Pat asked whether the WSPs would be able to handle an ICLU prior to having completed the test case scenarios, i.e. could Roger and Bell handle ICLU if the features was live at each 911 position in the PSAP immediately after TELUS had completed testing. All the WSP indicated that yes they were ready to handle ICLUs now therefore that would not be a problem. However, it was decided that since the test is of a short duration and could be completed relately soon the live ICLU feature will only be installed at each 911 positions once all WSPs have completed the testing, at which point the feature can be installed at each position and PEI will then go live with the feature. Eastlink is establishing wireless service and their trial can be conducted when they are ready. **Test Case Scenarios:** The document was reviewed and amended as proposed and will be used by each WSP to conduct the testing of each case. Some cases as described will not be possible to conduct in PEI but will be applicable when other jurisdictions are able to use the ICLU and should be tested in those environment when the time comes. Each WSP will complete the tests using the following technologies based on their current platform: Bell: CDMA and HSPA Rogers: GSM and HSPA TELUS: CDMA and HSPA (IDEN is not a technology deployed on PEI) **UPDATE: PEI's feature is in place and function to start testing and trial as of June 7th. WSPs will be advised to communicate with Pat to set internal schedules to complete testing as per the**

Serial	Date	Activity
		Test Case Scenarios developed. **Next Call: June 12, 11h00 – 12h30 EST.**
26	June 12, 2012	**Conference Call** **Attendees:** Bernard Brabant, Jean-Michel Dupuis, Rob Sired, Carlo Chiavaroli, Tony Hui, Peter Lang, James Ndirangu, Tim Armstrong, Pat Kelly, Craig Marshall, Mauricio Humer, SinD Roy, Gail Jones, Phaedra Vanbuuren, Karen Warren, Glenn Freer. Tina Lowenberger, Diane Pelletier Update of Trial/Testing Activities: • PEI finished readiness testing and gave green light to go for WSPs to start testing as per proposed plan. • TELUS and Bell are combining efforts to conduct test calls as per test case scenario template for both WSPs. • Testing will begin June 13th and Phaedra Vanbuuren of Bell is coordinating this effort. • It is expected that roughly 150 calls or more will have to be concluded therefore there is a chance that testing will spill over into mid week of June 18th. • Rogers had been scheduled to start testing as early as June 18th, therefore to avoid overlap Rogers was asked if they would consider delaying their test start to June 25th week. Jean-Michel was to look into that possibility and report if this was problematic. • All three WSPs agreed to work together to ensure that testing and timing was well coordinated and scheduled with Pat. The cooperation and efforts are much appreciated. • Pat will be able to provide data received for each call made and will share with each WSP individually for analysis. Data will provide information required to draft final report on TIF 59 finding and value of the feature so that CRTC can make appropriate recommendations going forward. • It was restated that TIF 59 is not focused on accuracy of the rebid locations, however, the test cases and the availability of generating reports on each rebid will not only inform the TIF 59 group, but also the TIF 69 group who is dealing with the accuracy issues. • Diane indicated that the analysis of the returned results of the test cases will be critical to PSAPs so that they may determine if this feature provides the desired value so that each PSAP can determine whether they spend monies on getting their respective vendors to create an interface or not. That will be critical to note in the final report.

Serial	Date	Activity
		• Following the PEI testing and results analysis it will be important for the group to discuss and outline what a Standard Deployment and Rollout would look like. There should be some basic test cases identified as part of any further deployments across Canada. Next Call is Scheduled for June 19th from 11h00 – 12h30 EST. Agenda will focus on feedback of ongoing testing by Bell and TELUS.
27	June 19, 2012	**Meeting postponed to June 26th**
28	June 26, 2012	**Conference Call** **Attendees:** Bernard Brabant, Jean-Michel Dupuis, Rob Sired, Carlo Chiavaroli, Peter Lang, James Ndirangu, Tim Armstrong, Pat Kelly, Craig Marshall, Mauricio Humer, SinD Roy, Gail Jones, Phaedra Vanbuuren, Tony McCarthy, Janet Nickerson, Chris Holigroski, Pierre Foucault, Grant Dodd, Glenn Freer. Tony Hui,,Tina Lowenberger, Diane Pelletier **Update:** • Rob Sired thanked Bell, Phaedra and Pat for coordinating and completing the testing for Bell and TELUS. • Phaedra provided an overview of the test case results. • Rogers will begin testing on June 27th and expect to be completed by June 29th. • Pat noted that on many cases when a rebid was done they saw some improvement on the accuracy of the location as well. • Since TIF 59 is not about accuracy it will only be appropriate to make a general comment about accuracy, but the information captured in the test case results will be shared with TIF 69 group for their use. • The test results are considered successful and the ICLU feature works and does allow a PSAP the ability to locate or relocate a caller when required. Next call scheduled for July 4th at 11h00 EST at which time we should have the results of the Rogers testing.
29	July 4, 2012	**Conference Call** **Attendees:** Bernard Brabant, Jean-Michel Dupuis, Rob Sired, Carlo Chiavaroli, Pat Kelly, Craig Marshall, SinD Roy, Gail Jones, Phaedra Vanbuuren, Chris Holigroski, Grant Dodd, Glenn Freer. Tony Hui,,Tina Lowenberger, Tom Paniak, Diane Pelletier **Update:** • Testing for Rogers was successful and Pat plans to enable the feature on all his live positions by Friday, July 6th. • Pat will monitor, document and report outcomes on the feature usage and performance in a the live environment and will be able to provide feedback at our July 17th meeting. • The question was asked as to what would happen if the call back number was not displayed to operator but the operator gets the number from the caller and types it in manual; what

Serial	Date	Activity
		would happen. Pat will ask his vendor if the typed number would be the number used to initiate the rebid. If not, then the only option to the operator would be to call the WSP for tracing. • It was decided that ICLU 20 & 21 would be redone for US and International Roamer, with multiple rebids attempted to see what would happen. • Diane will start outlining and drafting the Trial Evaluation Report Next call will be scheduled for July 17 at 11h00 EST at which time the TIF group will start working on the Trial Evaluation Report.

30	July 17, 2012	**Conference Call**
		Attendees: Bernard Brabant, Carlo Chiavaroli, Pat Kelly, SinD Roy, Gail Jones, Phaedra Vanbuuren, Grant Dodd, Glenn Freer. Tony Hui,,Tom Paniak, Tracy Finn, James Ndirangu, Janet Nickerson, Fernando Martinez, Mauricio Humer, Peter Lang Diane Pelletier
		
		• Pat enabled feature at all 911 work stations on July 12th.
		• Pat attempted to initiate a rebid from a manually entered phone number which was unsuccessful. He will discuss with vendor.
		• Revalidation of Test 20 & 21 for US and International Roamers.
		  ○ Rogers did not engage PSAP as the retest was done in labe setting.
		  ○ Bell conducted test only for Bell. It was assumed that TELUS would react the same way.
		• Report Suggestions as part of the next steps to concluding a report:
		  ○ Technical aspects are very important to include
		  ○ Make recommendations
		  ○ Identify further rollout of trial if applicable
		  ○ Indicate that MTS not represented
		  ○ New Bullet – Risk and Considerations
		
		Diane requested any feedback for the 10 of August. August 15th meeting postponed to August 29th at 11h00 EST, regular bridge.

31	Aug 29, 2012	**Conference Call** **Attendees:** Carlo Chiavaroli, Pat Kelly, SinD Roy, Gail Jones, Phaedra Vanbuuren, Glenn Freer. Tom Paniak, James Ndirangu, Janet Nickerson, Fernando Martinez, Mauricio Humer, Bernard Brabant, Guy Caron, Tim Armstrong, Siv, Pierre Foucault, Nicolas Pierre, Rob Sired, Chris Holigroski, Tony Hui, Diane Pelletier Pat confirmed that initiating ICLU from a manual entered cell phone number into the CAD/CPE will not work. Serial #13 closed. Pat indicated that the feature is being used by the PSAP operators but he hasn't had time to do an indepth review of when the feature was initiated, why and results. He will continue to monitor and provide more insight during our next call. The group then started discussing the writing of the report with some

Serial	Date	Activity
		concentration on key information to capture in the report as well has how the report shouldbe layed out. Those members currently working on the TIF 61 report suggested that the TIF 59 ICLU Evaluation Report should follow the same format and outline. The group agreed. A TIF 59 report writing sub-group made up of representatives from PSAP, WSP and SP was formed and will begin a series of conference calls designed to develop and edit a report for final review and editing of the entire TIF 59 group, prior to submitting to ESWG. • Members include: Rob, Bernard, Gail, Phaedra, Carlo, Jean-Michel, Guy, James, Pat, Siv, and Tom • Conference calls were booked for September 5, 21, and 25 • Additional calls are now booked for October 12 and 17 Diane thanked those who volunteered to help write the report. Mtg was adjourned without setting a TIF 59 full group meeting. A conference call will be set as soon as the report is at a stage where it requires review of the entire committee.
31	Oct 3, 2012	Diane made a presentation on TIF 59 during the Face to Face Meeting in Ottawa. The presentation focused on highlights of the trial and an overview of the report writing work underway. The ESWG requires the report prior to December 31, 2012 and the TIF 59 Group is confident that a report will be ready before that date.
32	Oct – Nov 2012	The TIF 59 report writing sub-group held numerous calls to finalize this Report for submission. It was completed and approved by ESWG for forwarding to CISC and the CRTC on Nov 27, 2012.

ACTION REGISTER:

Serial	Action	Due Date	Status	Prime
1	PSAPs to draft a contribution outlining ICLU requirements	2010.3.11	Completed	J. Broomfield
2	PSAPs to draft a contribution outlining additional ICLU requirements	2010.4. 13	Completed	J. Broomfield
3	ILEC assessment of ICLU requirements	2010.12.14	Completed	Bell/Telus
4	Establish a Trial Planning Sub-Group for focused Bell Aliant and Maritime PSAP discussions	2011.09.01	Completed	D. Pelletier
5	Request extension of six month to reach method to develop and implement PSAP-initiated ICLU	2011.10.04	Closed	D. Pelletier

Serial	Action	Due Date	Status	Prime
6	Clarify whether the rebid interval needs to be fixed at 60 secs or variable, based on the reception of the response	2012.01.10	Completed	WSPs
7	Diane will send a Consensus Question to all TIF 59 participants to set the timer at 35 seconds following the delivery of the initial and subsequent location information to the PSAP	2012.03.06	Complete	D. Pelletier
8	Pierre to provide document(s) in support of the claim that multiple rebid occurrences will rapidly drain the handset battery when performing A-GPS locates.	2012.03.06	Closed	P. AbiNader
9	Diane to engage Pat, Janet and Tim to: clarify need for pre-trial and get consent for Bell Aliant to Project Manage the PEI trial	2012.04.17	Closed	D. Pelletier
10	Participants to submit Test Case Scenario contributions to Diane as soon as possible in order to compile a table of cases for review, discussion and approval.	2012.04.17	Closed	WSP
11	Pat to enable the ICLU feature on all active 911 workstations as soon as possible	2012.07.17	Complete	Pat (PEI)
12	Monitor, document and report outcomes on the feature usage and performance in a the live environment	2012.07.17	Ongoing	Pat (PEI)
13	Pat to confirm with his CAD vendor if the typed number would be the number used to initiate the rebid. If yes, PEI and WSPs to test and validate what happen when the valid call back number is not displayed to the operator but the operator gets the number directly from the caller (while the 9-1-1 call is still active) and types it in manually; what happen during a rebid	2012.07.17	Closed	Pat (PEI), WSPs & 9-1-1 SP
14	Revalidate ICLU test cases 20 & 21 for US and International Roamer, with multiple rebids attempts	2012.07.17	Complete	WSPs
15	Complete Trial Report and submit to the CRTC for approval.	2012.11.27	Complete	Report Writing Sub-group

TIF CONTRIBUTION LOG:

ID#	Date	Originator	Description
ESCO 308	May 14, 2009	Judy Broomfield – Ontario 9-1-1 Advisory Board, Mike Myette - Director, Emergency Services EMO Nova Scotia	PSAP Requirements for ICLU Stage 2 Feature
ESCO 309	May 27, 2009	Bell Mobility	Bell Mobility's Response to PSAP re-bid proposal
ESCO 310	May 27, 2009	TELUS ILEC, TELUS Mobility, Bell Canada ILEC and Bell Mobility	This collective contribution for consideration at CISC ESWG represents the views, positions and recommendations of TELUS ILEC, TELUS Mobility, Bell Canada ILEC and Bell Mobility in regard to In-Call Location Updates for wireless 9-1-1 calls as a Stage 2 deliverable.
ESCO 311	June 4, 2009	Rogers Wireless	Rogers comments on PSAP contribution ESCO0308
ESCO 312	June 22,2009	Ontario 9-1-1-Advisory Board (OAB); Nova Scotia, 911 Cost Recovery Fee Committee and 911 Administrative Office; British Columbia 9-1-1 Service Providers Association (BCSPA); Alberta E9-1-1 Advisory Association (AEAA); Sask911, Ministry of Corrections, Public Safety and Policing; Winnipeg Police Service; Association des Centres d'urgence du Quebec (ACUQ); NB	PSAP Response to Industry submissions ESCO 0309, ESCO 0310 and ESCO 0311.

ID#	Date	Originator	Description
		911 Services/Service d'urgence N-B 911 Department of Public safety/Securite Publique; Province of Prince Edward Island.	
ESCO 0336	March 8,2010	As above	Wireless Phase II E9-1-1 In-call Location Update, Stage Two PSAP Requirements
ESCO 0338	May 18, 2010	Bell Mobility	Comments in response to PSAP views expressed in relation to data and timing requirements identified in ESCO 0336 and during the conference call of May 13, 2010.
ESCO0375	Feb 11, 2011	9-1-1 Service Providers collectively	"The Companies" position and recommendations regarding the PSAP-initiated In-Call Location Update feature with proper consideration to the PSAP contribution ESCO0336 and Bell Mobility's contribution ESCO0338.
ESCO0379	May 15, 2011	PSAPs Group	The PSAP community is in general agreement with the technical proposal and overall approach as presented under ESCO 0375, but believes some parts of the proposal require further work. Those particular components are identified in this contribution.
ESCO0390	Feb 10, 2012	Rogers	Comments in response to ICLU/Rebid Timing Issue
ESCO0391	Feb 27, 2012	Telus	Comments in response to ICLU/Rebid Timing Issue
ESCO0395	Mar 5, 2012	Eastlink	Comments in response to ICLU/Rebid Timing Issue
ESCO0396	Mar 12, 2012	Rogers	Response to Consensus question to the TIF 59 Group with respect to enabling a rebid 35 seconds following the delivery of the initial or subsequent location information at the PSAP
ESCO0397	Mar 20, 2012	MTS Allstream	Response to Consensus question to the TIF 59 Group with respect to enabling a rebid 35 seconds following the delivery of the initial or subsequent location information at the PSAP
ESCO0398	Mar 22, 2012	B. Brabant	Analysis of ICLU Rebid Timing Policy with regard to PSAP Operations
ESCO0401	Apr 4, 2012	Rogers	ICLU Timing Resolution - 35 second timer.
ESCO0422	Nov 27, 2012	MTS Allstream	E911 Phase 2 Stage 2 In-Call Location Update (ICLU)